hydrotechnologies

PRESSURE VESSELS CODELINE

CODELINE PRESSURE VESSELS

27

CODELINE & HYTEK : LA PARTNERSHIP CHE FONDE IL SERVIZIO ALLA QUALITA'

Pressure vessels OCTALINE, i più avanzati del mondo:
Con più di 350.000 vessels venduti nel mondo, il brand CodeLine è ormai presente da decenni nei processi industriali dove è richiesto l' utilizzo di Pressure Vessels di affidata qualità e comprovata efficienza.
Le continue innovazioni prodotte, unite ad un' affidabilità garantita nel tempo, hanno fatto di CodeLine il leder mondiale nella produzione di Pressure Vessels.
CodeLine viene utilizzato nei maggiori processi di trattamento delle acque: dalle acque municipali a quelle di mare, dalle acque per uso industriale a quelle per uso farmaceutico, fino ad arrivare alle industrie alimentari e di beverage.
HYTEK S.r.l., che opera ormai da decenni nel mercato mondiale dov' è richiesta efficienza ed innovazione, ha deciso di sposare l' obiettivo finalizzato alla ricerca di Partners di riconosciuta affidabilità, in grado di originare elevati standard produttivi a prezzi altamente competitivi.
Ed è per questo che dal 2003 HYTEK & CODELINE, rappresentano una nuova realtà del mercato globale, capace di fondere alta qualità all' eccellenza del servizio.
Oggi OctaLine è IL PRESSUR VESSELS più avanzato del mondo, ed HYTEK è pronta a divulgarne i suoi elevati standard produttivi.

Perchè OCTALINE è il migliore
OCTALINE è un prodotto derivante da un programma ambizioso di Ricerca e Sviluppo che ha portato alla realizzazione del Pressure Vessel più avanzato al mondo. Ecco il perché:

· LA SEDE OTTAGONALE con la sua superficie piana, garantisce una miglior tenuta idraulica delle porte laterali.
· LE PORTE LATERALI FILETTATE E SMONTABILI offrono un miglior allineamento idraulico in fase di installazione ed una più agevole manutenzione.
· UN UNICO SISTEMA DI CHIUSURA DELLA TESTATA che agevola il rapido accesso alle membrane.
· LA TESTATA MONOBLOCCO IN NORYL che riduce notevolmente le parti di ricambio attraverso:
1. l' utilizzo di 1 solo pezzo in Noryl al posto di 3 (solo per i Vessels fino a 600 PSI Non-ASME Coded);
2. il supporto in alluminio per la testata in Noryl: disponibile per i Vessels ASME Coded a completamento della gamma sulle diverse pressioni di esercizio;
· LE DIVERSE SOLUZIONII SUL POSIZIONAMENTO DELLE PORTE LATERALI che agevolano la predisposizione dell' impianto in fase progettuale, diminuendo altresì in maniera considerevole i costi della raccorderia;
· IL FACILE INSERIMENTO ED ESTRAZIONE delle membrane che diminuiscono i costi di gestione e manutenzione;
· L' AVER ESTESO LA PRESSIONE DI SCOPPIO a 6 volte la pressione massima di esercizio inalzando così la soglia di sicurezza e di qualità;
· LA POSSIBILITA' DI AVERE SU RICHIESTA il certificato ASME Code apposto sul Vessel che garantisce la qualità assoluta.

Che cosa fa unico OCTALINE?
Come progettare una superficie piana in un Vessel di forma circolare? Questa era la sfida da vincere nella realizzazione degli OCTALINE. La Ricerca & Sviluppo per la progettazione della superficie OCTALINE, ha mostrato che la forma ottagonale era la soluzione vincente per poter posizionare 4 porte per ciascun lato del Vessel distanziandole ciascuna di 90°.
I pressure Vessels OctaLine, sono prodotti utilizzando un unico incavo di forma ottagonale

CODELINE & HYTEK : THE PARTNERSHIP PUTTING SERVICE AND QUALITY TOGETHER

Presure Vessels OCTALINE – the most advanced in the world
With more than 350.000 vessels sold on all over the world, CODELINE is present since more than ten years in the industrial process where it is requested the utilization of pressure vessels with good quality and efficiency.
The continuous innovation together with the high quality have led CODELINE to be the first manufacturer of pressure vessel in the world.
CODELINE is used also in the most important process of water treatment: from municipality water to seawater, from industrial water to pharmaceutical water up to food and beverage industries.
HYTEK srl, that is operating since more than ten years in the world market where it is requested efficiency and innovation, has decided to find new partners capable of the highest standard production with the most competitive prices.
For this reason, HYTEK and CODELINE represent, since 2003's, the new reality of the global market, capable to put high quality and excellent service together.
Today, the CODELINE OctaLine is the most advanced pressure vessel in the world and HYTEK is ready to spread its high standard production.

Why is the OCTALINE the best ?
Because it is a product coming from a very ambitious program of research and development leading to the realisation of the most advanced pressure vessel in the world.
Here are the reasons:

· The octagonal inside of the vessel with its flat surface grants a better hydraulic seal of the side ports;
· The side screw and demountable ports allow a better installation and maintenance;
· The only closure head system makes the access to the membranes easier and quicker;
· The integral head in Noryl reduces considerably the spare parts by:
1. Utilizing one only piece in Noryl instead of 3 (for the vessels up to 600 Psi Non ASME coded alone),
2. utilizing the aluminium support for the head in Noryl: available for the vessels ASME coded on the completion of the range on the different working pressures;
· The different solutions regarding the position of the side ports that make the plant predisposition during the design easier, by reducing also the connection costs;
· The simple mounting and removal of the membranes that reduce the management and maintenance costs;
· The extension of the water pressure up to 6 times more than the maximum working pressure, to make the safety and quality limit higher;
· The possibility to have, on request, the ASME CODE certification, whose label could be put on the vessel, that grants the absolute quality.

What does it make OCTALINE extraordinary?
How to design a flat surface in a round vessel? This was the challenge to be won by realizing the OCTALINE.
The research and development for the design of the OCTALINE surface had proved the octagonal shape was the winning solution in order to put 4 ports in each side of the vessel, each one far from each other 90°.
The pressure vessels OctaLine are manufactured in an only octagonal groove.

www.hytekintl.com info@hytekintl.com

PV 40-400 PENTAIR - PRESSURE VESSELS RO/UF 4"-400PSI END PORT

PV 40-400 PENTAIR

MATERIALE DI COMPOSIZIONE:

- Vessel: _____Vetroresina
- Tappi: _____PVC

DATI TECNICI

- Pressione di progetto: _____ 28 bar a 49°C (400 psi a 120°F)
- Temperatura minima di esercizio: _____ -7°C (20°F)
- Pressione di collaudo: _____ 41 bar (600 psi)
- Pressione di scoppio: _____ 110 bar (1600 psi)
- Uscita permeato: _____1/2" NPT Femmina
- Uscita concentrato: _____1/2" NPT Femmina
- Colore Standard: _____ Grigio
- Connessione con membrana da 3/4":___ Diretta senza adapter
- Nr. di elementi disponibili: _____ 1-2-3

CERTIFICATI:

- Direttiva 97/23/CE (PED)
- NSF/ANSI 61
- ISO 9001:2000

APPLICAZIONI:

- Osmosi inversa;
- Ultrafiltrazione.

ACCESSORI DA ORDINARE A PARTE:

- Selle: _____ CA45058 (nr. 2 per vessel)
- Tiranti: _____ CA50329 (nr. 2 per vessel)

TRATTAMENTO DELLE ACQUE:

- Domestiche
- Industriali
- Municipali
- Reflue (conntattare l' Ufficio tecnico Hytek)
- di mare
- Farmaceutiche
- Alimentari

PENTAIR PV 40-400

MATERIALS COMPOSITION:

- Shell material: _____Fiberglass
- Plugs: _____ PVC

TECHNICAL SHEET:

- Design Pressure: _____ 28 bar a 49°C (400 psi at 120°F)
- Min. Operating temperature: _____ -7°C (20°F)
- Factory Test Pressur e _____ 41 bar (600 psi)
- Burst Pressure: _____ 110 bar (1600 psi)
- Permeate Port: _____1/2" NPT Female
- Concentrate Port: _____1/2" NPT Female
- Standard color: _____ Grey
- Connection with 3/4" membrane: _____ Direct without adapter
- Nr. elements available: _____ 1-2-3

CERTIFICATIONS:

- 97/23/CE Directive (PED)
- NSF/ANSI 61
- ISO 9001:2000

APPLICATIONS:

- Reverse Osmose
- Ultrafiltration.

ACCESSORIES TO BE ORDERED SEPARATELY:

- Saddles: _____ CA45058 (nr. 2 X Vessel)
- Straps: _____ CA50329 (nr. 2 X Vessel)

WATER TREATMENTS

- Domestics
- Industrials
- Municipals
- Drains (contact Hytek Technical Office)
- Sea
- Farmaceutics
- Alimentary

www.hytekintl.com info@hytekintl.com

PRESSURE VESSELS RO/UF 4"-400PSI MODELLO PV 40-400 PENTAIR END PORT

RISCHI DEI DISPOSITIVI AD ALTA PRESSIONE

Questi dispositivi provocano morte, lesioni fisiche, o danni alla proprietà se non corettamente installati, adoperati e controllati. Leggere e comprendere tutte le norme in questo documento prima di aprire, usare, o riparare questo dispositivo. L'innosservanza di queste direttive e l'incuranza delle precauzioni possono causare un malfunzionamento con conseguenze gravi. Un uso o un assemblaggio incorretto, oppure l'impiego di componenti rotti o corrosi possono causare il distacco, ad alta velocità, della parte terminale. Raccomandiamo che l'apertura, la chiusura e la riparazione vengano fatte solo da personale qualificato in sistemi idraulici ad alta pressione.

Precauzioni Essenziali per la Sicurezza

DA FARE....

• Leggere, comprendere e seguire ogni direttiva in questo documento. La loro incuranza può far decadere la garanzia o avere conseguenze gravi;

• Installare in un area idonea dove l' eventuale perdita d'acqua dovuta al malfunzionamento del dispositivo o delle tubature non possa arrecare danni ad apparecchiature sensibili, quali ad esempio i componenti elettrici;

• Verificare che i componenti per il blocco della testata siano opportunamente montati e sicuri;

• Ispezionare regolarmente le parti terminali, sostituire i componenti deteriorati, e risolvere le cause di corrosione;

• Seguire le istruzioni fornite dal produttore delle membrane per l'inserimento delle stesse nel dispositivo (rif. Elementi Sostitutivi).

DA NON FARE....

• Utilizzare il dispositivo a pressioni superiori a quelle specificamente stabilite;

• Riparare qualsiasi componente prima di verificare che la pressione nel dispositivo sia completamente sfiatata,

• Usare componenti corrosi. Tale impiego può portare a danni con gravi conseguenze;

• Pressurizzare il dispositivo senza verificare che entrambe le guarnizioni siano correttamente installate e sigillate nelle loro apposite scanalature;

• Tollerare perdite o permettere che le parti esterne siano constantemente bagnate;

• Abusare nell'uso di silicone lubrificante;

• Pressurizzare il dispositivo con componenti fuori posto a meno chè le porte del permeato non siano chiuse;

• Avvitare eccessivamente gli accessori alle porte.

Informazioni Generali

Il Pressure vessel in Vetroresina RO/UF della serie 40 è progettato per usi continui e prolungati per applicazioni di ultrafiltrazione e osmosi inversa. Sono disponibili modelli per 250 e 400 psi. I vessels serie 40E, sono disegnati per ospitare qualsiasi modello di membrana avente diametro nominale di 4" e lunga 40", un tubo permeato spesso .75" e un'involucro esterno lungo 38". L'involucro in Vetroresina può essere danneggiato da un montaggio sconsiderato, da urti, graffi ed abrasioni. Per prevenire potenziali rischi, le parti metalliche devono essere salvaguardate dalla corrosione. Le informazioni e consigli contenuti in questo Manuale d' Uso sono intese solo come

DANGER- HIGH PRESSURE DEVICE

This vessel may cause loss of life, severe bodily harm, or property damage if not correctly installed, operated and maintained. Read and understand all guidelines given in this bulletin before attempting to open, operate or service this vessel. Failure to follow these guidelines and observe every precaution will result in malfunction and could result in catastrophic failure. Misuse,incorrect assembly, or use of damaged or corroded components can result in high-velocity release of the end closure. We recommend that only a qualified technician experienced in servicing high-pressure hydraulic systems open, close and service this vessel.

Important Safety Precautions

DO...

• Read, understand, and follow every guideline in this bulletin. Failure to take every precaution may void warranty and could result in catastrophic failure;

• Install in an area where a vessel or piping malfunction that results in water leakage would not damage sensitive or expensive equipment, such as electronic components;

• Verify that head locking components are properly placed and secured;

• Inspect end closures regularly, replace deteriorated components, and correct causes of corrosion;

• Follow membrane element manufacturer's recommendations for loading elements into vessel (see Replacing Elements).

DO NOT...

• Operate vessel at pressures in excess of their specific pressure rating;

• Service any component until you verify that pressure is fully relieved from the vessel;

• Use corroded components. Use of such components may result in catastrophicfailure;

• Pressurize vessel until after visually inspecting to ensure that both retaining rings are correctly installed and seated in their grooves;

• Tolerate leaks or allow end closures to be routinely wetted in any way;

• Use excessive silicone lubricant;

• Pressurize vessel without element inplace unless permeate ports are plugged internally;

• Overtighten fittings in ports.

General Information

The 40 Series Fiberglass RO/UF Pressure Vessel is designed for continuous , long-term useas housing for reverse osmosis and ultrafiltration elements in typical commercial watertreatment systems. Models are available for 250 and 400 psi.The 40E Series vessels are designed to accommodate any make of 4-inch nominal diameter 40"long spiral-wound element with a .75" diameter product water tube and a 38" long outer shell design.The fiberglass shell can be damaged by rigid clamping, impact, scratches or abrasion. Metal parts must be maintained free of corrosion to eliminate potentially unsafe conditions due to corrosion.The information and guidelines incorporated in this

www.hytekintl.com info@hytekintl.com

implemento ad un idoneo comportamento all' installazione. Il corretto funzionamento e la manutenzione del vessel sono di responsabilità dell' acquirente. Questa guida dev'essere accompagnata dai rispettivi disegni tecnici. Quando i vessels della Serie 40 vengono correttamente installati e controllati garantiscono potenzialmente un corretto funzionamento per un periodo prolungato.

Installazione

Incuranti del quando e da chi il vostro vessel è stato montato, esistono controlli rapidi da eseguirsi prima della messa in servizio. Controllare che il dispositivo sia:

• Montato con materiali ammortizzanti (sughero e gomma) tra l'involucro in vetroresina e qualsiasi altra parte rigida.
• Libero di muoversi sotto pressione - involucro non rigidamente montato e che nessun tubo sia rigidamente connesso alle porte.
• Non utilizzatoo in alcun modo come sostegno ad altri componenti, come collettori sospesi tra le porte.

Aprire il Dispositivo

ATTENZIONE (Scaricare la pressione dal dispositivo prima di iniziare questa procedura).

L' ossidazione dei metalli e dei depositi minerali, possono interferire con lo smontaggio del vessel. Rimuovere tutto il materiale estraneo da entrambi i lati come segue:

- 1. Rimuovere i contaminanti con una spazzola di metallo o un adeguato abrasivo (come dello Scotch-BriteTM intermedio).
- 2. Rinsciacquare con acqua pulita eventuali depositi rimasti.

Rimozione della Testata

Rimuovere la Testata come segue:

- 1. Scollegare i tubi del permeato nei punti strategici, prestando attenzione a non creare stress inutili sulle connessioni filettate poste nella porta in plastica del permeato.

ATTENZIONE NON battere sopra gli accessori per evitare danni

- 2. Rimuovere l'elemento di Bloccaggio dall'incavo. Se l'elemento di Bloccaggio è difficile da estrarre, provare ad immergerlo in un agente detergente come LPSTM o WD40TM, evitando ogni possibile contatto con la membrana. Evitare di far leva o colpire in prossimità del vessel per evitarne la sua rottura.
- 3. Una volta che l'elemento di Blocaggio è stato rimosso, esaminare l'incavo sugli O-rings poichè potrebbe danneggiare la testata o la membrana. Se necessario utilizzare ScotchBriteTM o carta smerigliata qualità 600 per livellare l'area.
- 4. Installare un nipplo lungo 6" NPT da ½" nella porta della testata lato concentrato.
- 5. Impugnare il nipplo e rimuovere la testata. Un lieve movimento su ogni lato può essere necessario per mettere in movimento il disco portante/sigillante. Evitare di fare troppa pressione sulle connessioni della porta permeato.
- 6. Tirare la testata opposta fuori dal dispositivo. Ripetere i punti 4 e 5 per il lato opposto.

Elementi sostitutivi

Le successive procedure servono solamente a titolo informativo. Le membrane devono essere montate in accordo alle indicazioni fornite dal produttore. Se si ci accorge di vizi contatattare il fornitore dei componenti.

Rimozione dei Componenti

- 1. Rimuovere le testate da entrambi i lati come descritto in

User's Guide are intended only as a supplement to good industrial practice. Full responsibility for correct operation and maintenance of vessel remains with the user. This guide should be used in conjunction with respective engineering drawings. When properly installed and maintained, Model 40 Series vessels can be expected to provide safe operation over a long service life.

Installation

Regardless of when or by whom your vessel may have been installed, there are a few quick checks you should make before use. Check that each vessel is:

• Mounted with compliant material (cork or rubber) between the fiberglass shell and any rigid frame.
• Free to expand under pressure –shell not clamped rigidly in place, no rigid piping connections to port fittings.
• Not used in any way to support other components, such as piping manifolds hanging from ports.

Opening The Vessel

WARNING (Relieve pressure from vessel before beginning this procedure).

Contamination Removal Metal oxidation products and mineral deposits can interfere with vessel disassembly. Remove all foreign matter from both ends of vessel as follows.

- 1. Remove contaminants using a small wire brush or suitable abrasive (such as medium-grade ScotchBriteTM).
- 2. Flush away-loosened deposits with clean water.

Removing the Head

Remove Head as follows:

- 1. Disconnect permeate piping as required at nearest convenient joint, being careful not to place undue stress on the threaded connections in the plastic permeate port.

CAUTION DO NOT tap on fittings as this could damage parts

- 2. Remove the Locking segment from the groove. If the Locking segment is difficult to remove, try soaking with a release agent such as LPSTM or WD40TM, being careful to avoid any contamination of a membrane element. Take care to avoid hitting or levering against the vessel, as this could result in delamination.
- 3. Once the Locking segment has been removed, examine the groove area for burns O-rings which could damage the head or membrane. If necessary, use ScotchBriteTM or 600 grade sand paper to smooth the area.
- 4. Install a ½" NPT x 6" long nipple into the product port of the head on the concentrate end.
- 5. Grasp the nipple and pull the head straight out. A small amount of side-to-side movement maybe necessary to start the bearing/sealing plate moving. Care should be taken to avoid placing too much stress on the product port threads.
- 6. Pull the opposite head out of the vessel. Repeat step 4 & 5 at the opposite end.

Replacing Elements

The following procedures are provided for information only. Elements should be installed in accordance with the element manufacturer's recommendations. Where conflicts exists, contact the element manufacturer.

Removing Elements

- 1. Remove heads from both ends of vessel as described in

www.hytekintl.com info@hytekintl.com

Aprire il Dispositivo.
NOTA: Rimuovere e installare sempre i componenti in direzione del flusso in alimento.

Inserimento delle membrane

- 1. Prima di iniziare, assicurarsi che la membrana e il tubo permeato siano esternamente puliti, e nuovi.
- 2. Riposizionare la testata finale e i suoi accessori come descritto in Chiusura de Dispositivo.
- 3. Lubrificare moderatamente gli elementi di chiusura con lubrificanti raccomandati dal fornitore o con glicerina (un lubrificante commerciale che non ostruisce i componenti).

ATTENZIONE: NON lubrificare i componenti sigillanti con un lubrificante a base di silicone (come ParkerSuper O-Lube TM, ossia lubrificanti raccomandati per le testate).

- 4. Inserire la membrana con il suo oring di chiusura (solitamente a forma di U) montato controcorrente con il lembo verso l'alto.

ATTENZIONE: Se le membrane vengono installate nella direzione sbagliata queste potrebbero danneggiarsi irreversibilmente.

- 5. Spingere la membrana verso la direzione dell' alimento fino a che questa non si ancori saldamente alla testata. Se la membrana è dura da spingere, assicurarsi che l' oring sia correttamente posizionato e che si stia spingendo verso la direziione giusta.
- 6. Quando la membrana è installata chiudere il vessel come descritto nella seguente sezione.

Chiusura del vessel

Preparare e montare le testate e i suoi componenti come di seguito:

- 1. Rigenerare o sostituire i componenti della testata in modo che diventi come nuiva. (rif. Rinnovo Componenti) Il PWT O-ring dovrebbe essere sostituito ogni volta.
- 2. Ricoprire gli O-rings con un sottile ed uniforme strato di silicone lubrificante Parker Super O-Lube TM o con un lubrificante raccomandato dal produttore delle membrane.

NOTA: la glicerina è un lubrificante commerciale che non ostruisce le membrane. Nonostante ciò sono raccomandati i lubrificanti a base di silicone.

- 3. Installare gli orings più piccoli nelle insenature all'interno della porta del permeato.
- 4. Rimuovere ogni traccia di lubrificante.
- 5. Installare gli orings della testata alla fine del tappo.

NOTA: In alcuni casi è più facile montare prima le tubatzioni della testata. Se si conviene di utilizzare questa procedura, procedere come al punto 8 e 9.

- 6. Installare la testata nella parte finale del vessel. Usando i pollici applicare una pressione ad entrambi i lati del disco portante/sigillante per posizionare la testata in modo da pulire il dispositivo di Bloccaggio.

ATTENZIONE: NON pressurizzare il dispositivo senza che il componente(i) siano montati correttamente.

-7. Inserire la membrana se non ancora installata, e posizionare la testata lato acqua permeata sopra al tubo permeato. Poi montare la testata come al punto 6.

- 8. Allacciare le condutture alla Porta Permeata.

• A. Usare una spazzala metallica per rimuovere ogni materiale estraneo dalle filettature.

• B. Applicare un sigillante non-indurente o TeflonTM per la connessione con la porta permeato. Stringere i componenti a mano ruotandoli un quarto di giro, evitando di stringerli troppo con conseguente loro danneggiamento.

- 9. Per riconnettere le porte alimento/concentrato, seguire i punti A e B, prestando attenzione al fissaggio del piatto/testata

Opening the Vessel.
NOTE: Always remove and install element in the direction of feed flow.

Inserting Elements

- 1. Ensure that element exterior and shell bore are in clean, as-new condition before proceeding.
- 2. Reinstall head assembly at the downstream end as described in Closing the Vessel.
- 3. Lubricate element seal sparingly with the manufacturer's recommended lubricant or with glycerine (a commercially available lubricant that will not foul elements).

CAUTION: DO NOT lubricate element seals with a silicone based material (such as ParkerSuper O-Lube TM, the recommended lubricant for head seals).

- 4. Insert the element with the brine seal (typically a U-cup seal) installed on the upstream end with its lip facing upstream.

CAUTION: System malfunctions and element damage may result if elements are installed in the wrong direction.

- 5. Push the element downstream into shell until the elements fully engage with the downstream head. If element is hard to push, make sure the brine seal is properly installed and you are pushing from the upstream end.
- 6. When the element is installed, close the vessel as described in the following section.

Closing the vessel

Prepare and install head assemblies as described below:

- 1. Refurbish or replace head components as required to ensure as-new conditions. (See RefurbishingParts.) The PWT O-ring should be replaced each time.
- 2. Cover O-rings with a thin, even layer of Parker Super O-LubeTM silicone lubricant or the lubricant recommended by your element supplier.

NOTE: Glycerine is a commercially available lubricant that will not foul elements. However silicone lubricant is recommended for this application.

- 3. Install the smaller PWT seal into the groove inside the end of the permeate port.
- 4. Remove any residual lubricant.
- 5 Install head seal on to the end plug.

NOTE: On some systems it may be easier to install the piping connections before the head is installed. If so, please proceed to steps 8 and 9.

- 6 Insert head, that has threaded permeate port, into downstream end of vessel. Using both thumbs, apply equal pressure on opposite sides of the bearing/sealing plate to force head into vessel so that the head clears the Locking segment.

CAUTION: DO NOT pressurize vessel without element(s) properly installed.

- 7 Insert element if not already installed, and place permeate cap over product water tube in upstreamend of vessel. Then install upstream head using technique given in step 6.
- 8 Remaking Piping Connections to Permeate Port.

• A. Use a wire brush to remove all foreign matter from threads on pipe fittings.

• B. Apply non-hardening thread sealant or TeflonTM tape to fitting and install in permeate port. Tighten fitting a maximum one quarter-turn past hand tight; the component could be damaged if fittings are overtightened.

- 9 To reconnect the feed/concentrates port, follow steps A & B above, being careful to holdbearing/sealing plate securely

www.hytekintl.com info@hytekintl.com

in modo da prevenire eventuali danni.
- 10. Pressurizzare il dispositivo. Controllare che non vi siano eventuali perdite ai raccordi o intorno al vessel stesso. Nell' eventualità, scaricare la pressione e stringere opportunamente i componenti. Ripressurizzare il vessel e ricontrollare. **ATTENZIONE: NON tollerare perdite dal sistema, poichè possono causare corrosione e portare a gravi danni.**

Rimessa a nuovo dei Materiali
Ispezione dei Materiali
Materiali in Plastica: Esaminare eventuali crepe, cedimenti o scolorimenti. Essi possono indicare attacchi chimici al materiale. Le parti difettose devono essere sostituite. Possono essere considerati dei materiali alternativi.Contattare Hytek .
Materiali in Metallo: Controllare corrosioni, graffi, incisioni, rotture o altri danni agli anelli di chiusura e ai seegers.
Altri Materiali: Controllare ogni danno, come fessurazioni, scanalature, scheggiature che possono compromettere le resistenze o le caratteristiche di tenuta. Di seguito si riporta qualche esempio di difetti che possono richiedere la sostituzione delle parti danneggiate.
• Il Disco di chiusura e la porta del permeato sono: crepati, scoloriti e le parti sigillanti sono danneggiate (sbeccate o fessurate). I filetti della porta sono rigati e abrasi.
• Segmenti di Blocaggio: sono la parte più importante per il bloccaggio del tappo. Se queste sono piegate, corrose, crepate o logorate non devono essere utilizzate. Controllare eventuali crepe sottili.
Messa a nuovo del corpo vessel
- 1. Usando una sottile spazzola metallica, rimuovere ogni detrito dall'anello di chiusura contenuto nell'involucro.
- 2. Usare uno strato sottile/medio di ScotchBriteTM e un detergente delicato, pulire il vessel al suo interno per almeno 10 cm dall' apertura. Attenzione a non danneggiare la porta alimento/concentrato ed il corrispondente o-ring.
- 3. Usare acqua pulita per rimuove ogni eventuale detrito e tracce di sapone.
- 4. Esaminare l' interno del vessel per per eventuali graffi, irregolarità, o altre imperfezioni che possono interferire con una corretta tenuta. Quando il vessel è rimesso in funzione, se sono visibili delle perdite, è bene sostituire l' intero corpo.
Messa a nuovo di altri componenti
- 1. Rimuovere con una spazzola metallica qualsiasi deposito visibile sulle parti metalliche.
- 2. Strofinare l' intera superficie con una ScotchBriteTM di spessore medio fino a rimuovere tutti i contaminanti.
- 3. Pulire i componenti con acqua ed asciugarli.
- 4. Ispezionare ogni parte, per le motivazioni di cui sopra.
Sostituzioni dei componenti
Sostituire ogni componente che non può essere messo a nuovo. Sostituire i pezzi segnati, danneggiati o corrosi.
Attenzione: l' utilizzo di componenti danneggiati dalla corrosione possono comportare gravi problemi
Gli o-ring devono essere sostituiti ogni volta che il vessel viene riparato. Ogni parte dev'essere sostituita con ricambi originali.

to prevent damage.
- 10 Pressurize vessel. Inspect for leaks at connections to the vessel and all around the vessel it self. If any leaks occur, release pressure from vessel and tighten fittings as necessary. Then pressurize vessel and check for leaks again.
CAUTION: DO NOT tolerate any leaks. Leaks can result in corrosion and eventual catastrophicvessel failure.

Refurbishing Parts
Inspecting Parts
Plastic Parts: Examine for cracking, softening, or discoloring. This may indicate chemical attack of the material. Defective parts must be replaced. Alternate materials may be required. Contact Hytek.
Metal Parts: Check for corrosion, scratches, dents, cracks or other damage to insert ring and spiral retaining ring.
Other Parts: Examine for any damage, such as gouges, chips or cracks that could affect Pentair strength or sealing characteristics. The following are some examples of defect that may requirere placement of the affected part.
• Bearing/Sealing Plate and Permeate Port: cracked, discolored, sealing are as damaged (chipped or gouged). Port threads stripped or cross-threaded.
• Locking segment: are the sole means of end plug retention, Parts bent, corroded, cracked or damaged in any way must not be used. Carefully check for hair line cracks.
Refurbishing Shell
- 1. Using a fine wire brush, remove any large deposists from locking ring groove in the shell.
- 2. Using a medium or finer grade of ScotchBriteTM and mild soap solution, clean the inside of the vessel at least 4 inches in from each end. Take care not to damage feed/concentrate port and its respective seal.
- 3. Use clean water to rinse away all loosened deposits and soap residue.
- 4. Examine inside of vessel for scratches, gouges, or other imperfections that could prevent proper sealing. If such areas exist and leaks are observed when the vessel is placed back in service, the shell may need to be replaced.
Refurbishing Other Parts
- 1. Remove any large deposits from metal parts using a wire brush.
- 2. Scrub the entire surface with medium grade ScotchBriteTM until all contaminants are removed.
- 3. Rinse parts clean with fresh water and dry.
- 4. Inspect all parts, for service ability as specified above.
Part Replacement
Replace all parts that cannot be restored to as-new condition. Replace any parts showing signs of Pentair damage or corrosion.
CAUTION: Use of components damaged by corrosion can result in catastrophic failure.
Seals should be replaced as necessary each time the vessel is serviced. Any parts that need to be replaced from your supplier.

www.hytekintl.com info@hytekintl.com

DISEGNO TECNICO PV 40-400 PENTAIR / PENTAIR PV 40-400 TECHNICAL DRAW

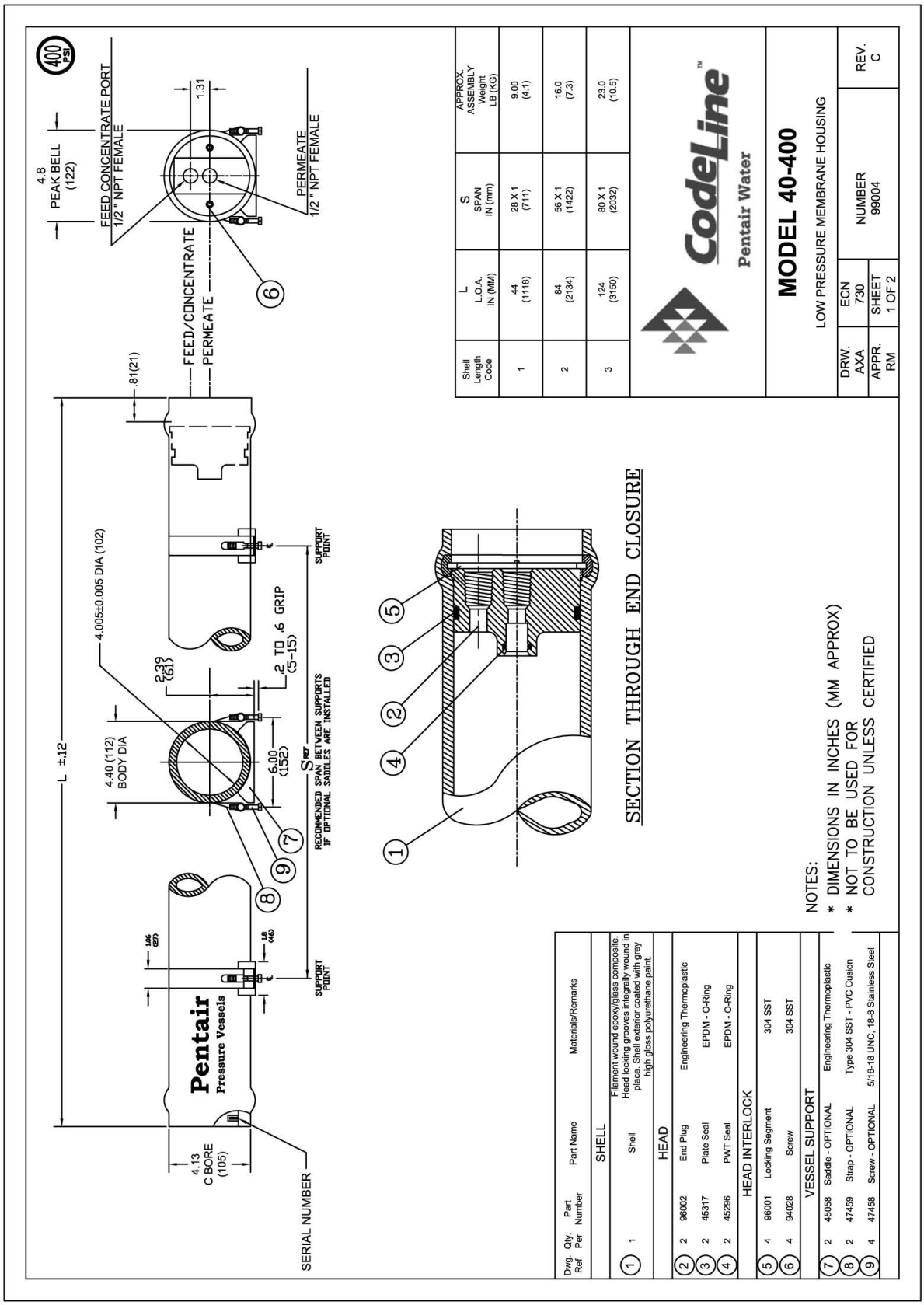

Shell Length Code	L L.O.A. IN (MM)	S SPAN IN (mm)	APPROX. ASSEMBLY Weight LB (KG)
1	44 (1118)	28 X 1 (711)	9.00 (4.1)
2	84 (2134)	56 X 1 (1422)	16.0 (7.3)
3	124 (3150)	80 X 1 (2032)	23.0 (10.5)

Dwg. Ref	Qty. Per	Part Number	Part Name	Materials/Remarks
			SHELL	
1	1		Shell	Filament wound epoxy/glass composite. Head locking grooves integrally wound in place. Shell exterior coated with grey high gloss polyurethane paint.
			HEAD	
2	2	96002	End Plug	Engineering Thermoplastic
3	2	45317	Plate Seal	EPDM - O-Ring
4	2	45296	PWT Seal	EPDM - O-Ring
			HEAD INTERLOCK	
5	4	96001	Locking Segment	304 SST
6	4	94028	Screw	304 SST
			VESSEL SUPPORT	
7	2	45058	Saddle - OPTIONAL	Engineering Thermoplastic
8	2	47459	Strap - OPTIONAL	Type 304 SST - PVC Cusion
9	4	47458	Screw - OPTIONAL	5/16-18 UNC, 18-8 Stainless Steel

RATING:

DESIGN PRESSURE..... 400 PSI AT 120°F (2.8 MPa AT 49°C)

MIN. OPERATING TEMP..... 20°F (−7°C)

FACTORY TEST PRESSURE..... 600 PSI (4.1 MPa)

BURST PRESSURE..... 1600 PSI (11.2 MPa)

INTENDED USE

THE MODEL 40−400 FIBREGLASS PRESSURE VESSEL IS DESIGNED FOR CONTINUOUS, LONG−TERM USE AS A HOUSING FOR SINGLE REVERSE OSMOSIS AND ULTRAFILTRATION ELEMENTS IN TYPICAL COMMERCIAL WATER TREATMENT SYSTEMS AT PRESSURES UP TO 400 PSI. ANY MAKE OF 4 INCH NOMINAL DIAMETER SPIRAL−WOUND ELEMENT WITH A 3/4" DIAMETER MALE PRODUCT WATER TUBE IS EASILY ACCOMMODATED.

THE MODEL 40−400 MUST BE INSTALLED, OPERATED AND MAINTAINED IN ACCORDANCE WITH THE LISTED PRECAUTION, AND GOOD INDUSTRIAL PRACTICE TO ASSURE SAFE OPERATION OVER A LONG SERVICE LIFE.

THE HIGH PERFORMANCE REINFORCED PLASTIC SHELL MUST BE ALLOWED TO EXPAND UNDER PRESSURE: UNDER RESTRAINT AT SUPPORT POINTS OR PIPING CONNECTIONS CAN CAUSE LEAKS TO DEVELOP IN THE SHELL. THE END CLOSURE, INCORPORATING CLOSE−FITTING, INTERLOCKING METAL COMPONENTS, MUST BE KEPT DRY AND FREE OF CORROSION; DETERIORATION CAN LEAD TO CATASTROPHIC MECHANICAL FAILURE OF THE HEAD ASSEMBLY.

PENTAIR WATER WILL ASSIST THE PURCHASER IN DETERMINING THE SUITABILITY OF THIS STANDARD VESSEL FOR THEIR SPECIFIC OPERATING CONDITIONS. THE FINAL DETERMINATION HOWEVER, INCLUDING EVALUATION OF THE STANDARD MATERIALS OF CONSTRUCTION FOR COMPATIBILITY WITH THE SPECIFIC CORROSIVE ENVIRONMENT SHALL BE THE RESPONSIBILITY OF THE PURCHASER.

SPECIFICATIONS SUBJECT TO CHANGE WITHOUT NOTICE.

PRECAUTIONS

DO.... READ, UNDERSTAND AND FOLLOW ALL INSTRUCTIONS;FAILURE TO TAKE EVERY PRECAUTION WILL AVOID WARRANTY AND MAY RESULT IN VESSEL FAILURE

DO.... PROVIDE OVER PRESSURE PROTECTION FOR VESSEL SET AT NOT MORE THAN 105% OF DESIGN PRESSURE

DO.... INSPECT END CLOSURES REGULARLY; REPLACE COMPONENTS THE HAVE DETERIORATED AND CORRECT CAUSES OF CORROSION

DO.... NOT... MAKE RIGID PIPING CONNECTIONS TO PARTS OR CLAMPS VESSELS IN ANY WAY THAT RESTRICTS GROWTH OF FIBREGLASS SHELL UNDER PRESSURE; ▲DIA = 0.01 IN. (0.25mm) AND ▲L = 0.3 IN. (8mm) FOR A LENGTH CODE −1 VESSEL

DO.... NOT HANG PIPING MANIFOLDS FROM PARTS OR USE VESSEL IN ANY WAY TO SUPPORT OTHER COMPONENTS

DO.... NOT OPERATE VESSEL AT PRESSURE AND TEMPERATURES IN EXCESS OF ITS RATING

DO.... NOT OPERATE VESSEL WITHOUT ELEMENT INSTALLED

DO.... NOT OPERATE VESSEL WITH PERMEATE PORT PRESSURE IN EXCESS OF 125 PSI (0.9 MPa) AT 120°F (49°)

DO.... NOT TOLERATE LEAKS OR ALLOW END CLOSURES TO BE ROUTINELY WETTED IN ANY WAY

DO.... NOT PRESSURIZE VESSEL UNTIL DOUBLE CHECKING TO VERIFY THAT THE RETAINING RINGS ARE IN PLACE

DO.... NOT WORK ON ANY COMPONENT UNTIL FIRST VERIFYING THAT PRESSURE IS RELIVED FROM VESSEL.

ORDERING

PLEASE SPECIFY THE FOLLOWING
* VESSEL MODEL
* MEMBRANE ELEMENT MAKE AND MODEL NUMBER
* SPECIFIC CONCERNS REGARDING INTENDED USE AND REQUESTS FOR SPECIAL MATERIALS OF CONSTRUCTION.

40−400−☐
SHELL LENGHT/ELEMENT INTERFACE

CODE	ELEMENT CAPACITY
1	ONE 40" DIRECT CONNECT
2	TWO 40" DIRECT CONNECT
3	THREE 40" DIRECT CONNECT

SHELL FINISH

EXTERIOR SHELL FINISH
GREY

CERTIFICATION

CERTIFICATION GRADE	
☐	CERTIFIED BY PENTAIR WATER
☐	OPTIONAL − CE MARKED

OPTIONS

END PLUG MATERIALS

	MATERIALS
☐	* POLYVINYL CHLORIDE

PERMEATE PORT CONFIGURATIONS

	PORT SIZES
☐	* 1/2" NPT FEMALE
☐	1/2" BSP/JIS FEMALE

FEED CONC. PORT CONFIGURATIONS

	PORT SIZES
☐	* 1/2" NPT FEMALE
☐	1/2" BSP/JIS FEMALE

*** STANDARD OPTIONS**

© Pentair Water

PRESSURE VESSELS RO CODELINE 4"-350 PSI PV 40E30N END PORT

PV 40E30N CODELINE

MATERIALE DI COMPOSIZIONE:

- Vessel: _____Vetroresina
- Tappi: _____PVC

DATI TECNICI

- Pressione di progetto: _____ 21 bar a 49°C (300 psi a 120°F)
- Temperatura minima di esercizio: _____ -7°C (20°F)
- Pressione di collaudo: _____ 31 bar (450 psi)
- Pressione di scoppio: _____ 124 bar (1800 psi)
- Uscita permeato: _____1/2" NPT Femmina
- Uscita concentrato: _____1/2" NPT Femmina
- Colore Standard: _____ Blu
- Connessione con membrana da 3/4":___ Diretta senza adapter
- Nr. di elementi disponibili: _____ 1-2-3

CERTIFICATI:

- Direttiva 97/23/CE (PED)
- NSF/ANSI 61
- ISO 9001:2000

APPLICAZIONI:

- Osmosi inversa;
- Ultrafiltrazione.

ACCESSORI DA ORDINARE A PARTE:

- Selle: _____ CA45058 (nr. 2 per vessel)
- Tiranti: _____ CA50329 (nr. 2 per vessel)

TRATTAMENTO DELLE ACQUE:

- Domestiche
- Industriali
- Municipali
- Reflue (conntattare l' Ufficio tecnico Hytek)
- di mare
- Farmaceutiche
- Alimentari

CODELINE PV 40E30N

MATERIALS COMPOSITION:

- Shell material: _____Fiberglass
- Plugs: _____ PVC

TECHNICAL SHEET:

- Design Pressure: _____ 21 bar a 49°C (300 psi at 120°F)
- Min. Operating temperature: _____ -7°C (20°F)
- Factory Test Pressur e _____ 31 bar (450 psi)
- Burst Pressure: _____ 124 bar (1800 psi)
- Permeate Port: _____1/2" NPT Female
- Concentrate Port: _____1/2" NPT Female
- Standard color: _____ Blue
- Connection with 3/4" membrane: _____ Direct without adapter
- Nr. elements available: _____ 1-2-3

CERTIFICATIONS:

- 97/23/CE Directive (PED)
- NSF/ANSI 61
- ISO 9001:2000

APPLICATIONS:

- Reverse Osmose
- Ultrafiltration.

ACCESSORIES TO BE ORDERED SEPARATELY:

- Saddles: _____ CA45058 (nr. 2 X Vessel)
- Straps: _____ CA50329 (nr. 2 X Vessel)

WATER TREATMENTS

- Domestics
- Industrials
- Municipals
- Drains (contact Hytek Technical Office)
- Sea
- Farmaceutics
- Alimentary

www.hytekintl.com info@hytekintl.com

DISEGNO TECNICO PV 40E30N CODELINE / TECHNICAL DRAW CODELINE PV 40E30N

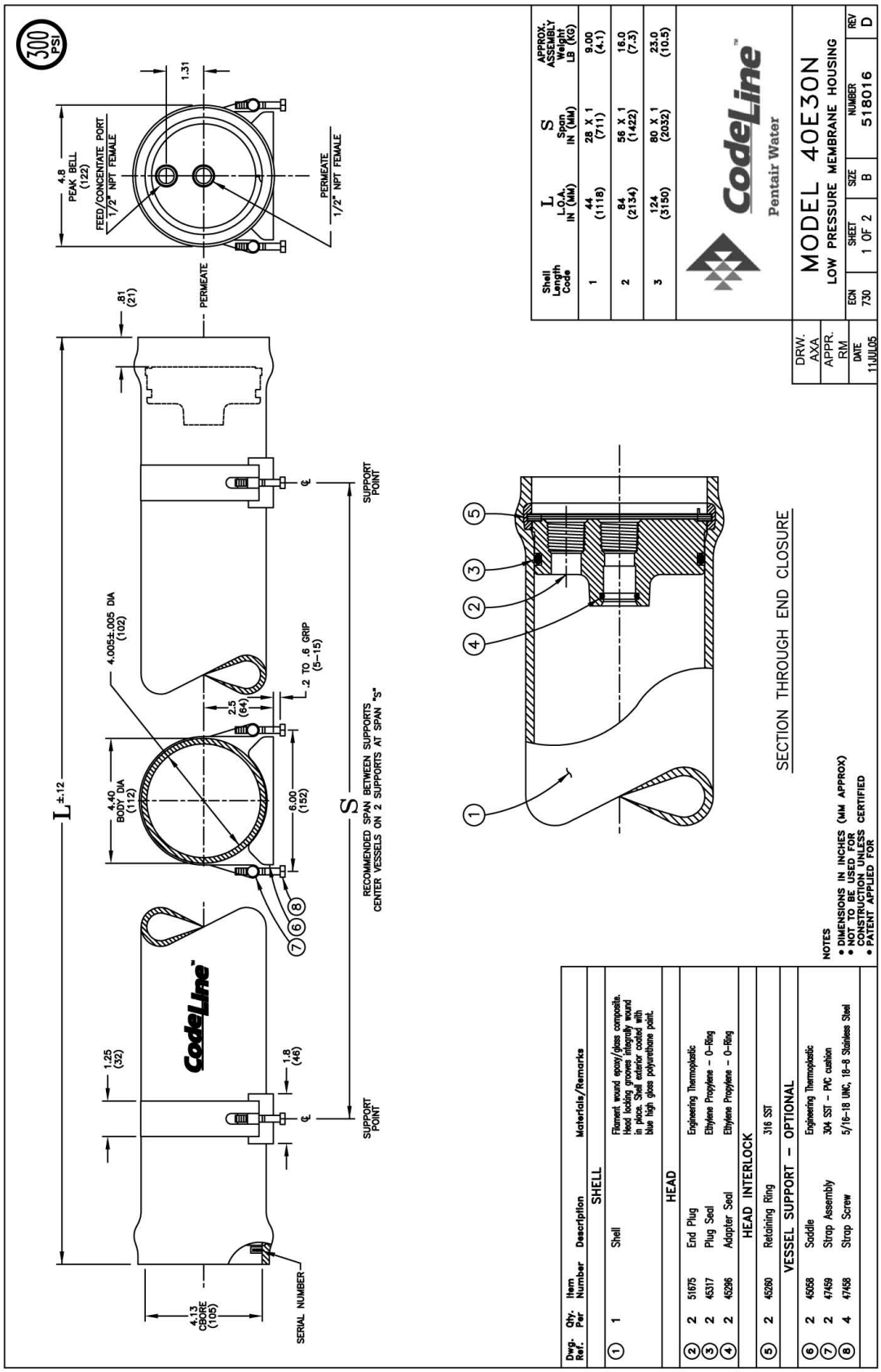

www.hytekintl.com info@hytekintl.com

RATING:

DESIGN PRESSURE.....300 PSI at 120°F (2.1 MPa at 49°C)

MIN. OPERATING TEMP.....20°F (−7°C)

FACTORY TEST PRESSURE.....450 PSI (3.1 MPa)

BURST PRESSURE.....1800 PSI (12.2 MPa)

INTENDED USE

The **Model 40E30N Fiberglass RO/UF Pressure Vessel** is designed for continuous, long−term use as a housing for single reverse osmosis and ultrafiltration elements in typical commercial water treatment sytems at pressures up to 300 psi. Any make of 4−inch nominal diameter spiral−wound element with a 3/4" diameter male product water tube is easily accommodated.

The Model 40E30N must be installed, operated and maintained in accordance with the listed precautions, and good industrial practice to assure safe operation over a long service life.

The high performance reinforced plastic shell must be allowed to expand under pressure; undue restraint at support points or piping connections can cause leaks to develop in the shell. The end closure, incorporating close−fitting, interlocking metal components, must be kept dry and free of corrosion; deterioration can lead to catastrophic mechanical failure of the head assembly.

Pentair Water will assist the purchaser in determining the suitability of this standard vessel for their specific operating conditions. The final determination however, including evaluation of the standard materials of construction for compatibility with the specific corrosive environment, shall be the responsibility of the purchaser.

Specifications subject to change without notice.

PRECAUTIONS

DO... read, understand and follow all instructions; failure to take every precaution will void warranty and may result in vessel failure
DO... mount shell on horizontal or vertical members at central span "S" using compliant vessel supports; tighten hold down straps just snug.
DO... provide overpressure protection for vessel set at not more than 105% of design pressure
DO... inspect end closures regularly; replace components that have deteriorated and correct causes of corrosion

DO NOT... make rigid piping connections to ports or clamp vessel in any way that restricts growth of fiberglass shell under pressure; ▲DIA = 0.01 in. (0.25mm) and ▲L = .03 in. (.8mm) for a length code −1 vessel
DO NOT... hang piping manifolds from ports or use vessel in any way to support other components
DO NOT... operate vessel at pressures and temperatures in excess of its rating
DO NOT... operate vessel without element installed.
DO NOT... tolerate leaks or allow end closures to be routinely wetted in any way
DO NOT... pressurize vessel until double checking to verify that the retaining rings are in place
DO NOT... work on any component until first verifying that pressure is relieved from vessel

For complete information on proper use of this vessel please refer to the 40E Series USER'S GUIDE, Bulletin 518014

CAUTION:

EYE PROTECTION SHOULD BE WORN WHEN REMOVING OR INSTALLING RETAINING RINGS.

KEEP FINGERS CLEAR FROM RETAINING RING WHILE INSTALLING LAST OF TWO TURNS.

RING MAY SNAP INTO POSITION POSSIBLY PINCHING FINGERS.

ORDERING

Using the chart below, please check the features you require and fax them with your purchase order to our customer service department for expedited processing.
For optional materials and or feature not listed below, please consult the factory for pricing and availability.

Please note that we require your membrane brand and model number when ordering. If this information is not initially available, you may provide it at a later date by checking the appropriate box below

VESSEL LENGTH CODE − please check one

MODEL 40E30N ☐−1 ☐−2 ☐−3

EXTERIOR FINISH − please check one

☐ Standard − blue high−gloss polyurethane coating over sanded surface.

CERTIFICATION − please check one

☐ Standard − certified by Pentair Water, not code stamped.
☐ Option − CE marked.

MEMBRANE BRAND AND MODEL − please check one and fill in information

☐ Please supply adapters for the following membrane brand and specific model.
Brand _____ Model _____

☐ Membrane brand and model information is not currently available, but will be supplied to CodeLine on or before the following date. ____/____/____

MATERIAL AND PORT CONFIGURATIONS− please check

Serial number end	Opposite end	
		END PLUG MATERIALS
☐	☐	Standard − Polyvinyl Chloride
		PERMEATE PORT CONFIGURATION
☐	☐	Standard − 1/2" NPT Female
		FEED PORT CONFIGURATION
☐	☐	Standard − 1/2" NPT Female

Serial number end ☐☐☐☐☐☐
Opposite end ☐☐☐☐☐☐

©Pentair Water

PRESSURE VESSELS RO CODELINE 4"-600 PSI PV 40E60 END PORT

PV 40E60 CODELINE

MATERIALE DI COMPOSIZIONE:

- Vessel: _____Vetroresina
- Tappi: _____PVC
- Anello di chiusura tappo:_____ 316 SST
- Basamento tappo: _____ Acciaio Nichelato

DATI TECNICI

- Pressione di progetto: _____ 41 bar a 49°C (600 psi a 120°F)
- Temperatura minima di esercizio: _____ -7°C (20°F)
- Pressione di collaudo: _____ 62 bar (900 psi)
- Pressione di scoppio: _____ 248 bar (3600 psi)
- Uscita permeato: _____ 1/2" NPT Femmina
- Uscita concentrato: _____ 3/4" NPT Femmina
- Colore Standard: _____Bianco
- Connessione con membrana:___ Tramite adapter (2 x vessel, non inclusi, vedi documentazione tecnica)
- Nr. di elementi disponibili: _____1-2-3-4-5-6

CERTIFICATI:

- Direttiva 97/23/CE (PED)
- NSF/ANSI 61
- ISO 9001:2000

APPLICAZIONI:

- Osmosi inversa;
- Ultrafiltrazione.

ACCESSORI DA ORDINARE A PARTE:

- Selle: CA45058 (nr. 2 per vessel fino al 3 elementi, dal 4 elementi fino al 6 elementi nr. 3 per vessel)
- Tiranti: CA47459 (nr. 2 per vessel fino al 3 elementi, dal 4 elementi fino al 6 elementi nr. 3 per vessel)
- Adapter: nr. 2 x vessel (vedi documentazione tecnica).

TRATTAMENTO DELLE ACQUE:

- Domestiche
- Industriali
- Municipali
- Reflue (conntattare l' Ufficio tecnico Hytek)
- di mare
- Farmaceutiche
- Alimentari

CODELINE PV 40E60

MATERIALS COMPOSITION:

- Shell material: _____Fiberglass
- Plugs: _____ PVC
- Retaining ring _____ 316 SST
- Bearing ring _____ Nickel-plated Alloy Steel

TECHNICAL SHEET:

- Design Pressure: _____ 41 bar a 49°C (600 psi at 120°F)
- Min. Operating temperature: _____ -7°C (20°F)
- Factory Test Pressur e _____ 62 bar (900 psi)
- Burst Pressure: _____ 248 bar (3600 psi)
- Permeate Port: _____ 1/2" NPT Female
- Concentrate Port: _____ 3/4" NPT Female
- Standard color: _____ White
- Connection membrane: _____ By Adapter (2 x vessel, not incuded, see technical documentation)
- Nr. elements available: _____1-2-3-4-5-6

CERTIFICATIONS:

- 97/23/CE Directive (PED)
- NSF/ANSI 61
- ISO 9001:2000

APPLICATIONS:

- Reverse Osmose
- Ultrafiltration.

ACCESSORIES TO BE ORDERED SEPARATELY:

- Saddles: CA45058 (nr. 2 supports required up to 3 elements, 3 supports required for length 4 and over)
- Straps: CA47459 (nr. 2 straps required up to 3 elements, 3 supports required for length 4 and over)
- Adapter: nr. 2 x vessel (see technical documentation).

WATER TREATMENTS

- Domestics
- Industrials
- Municipals
- Drains (contact Hytek Technical Office)
- Sea
- Farmaceutics
- Alimentary

www.hytekintl.com info@hytekintl.com

DISEGNO TECNICO PV 40E60 CODELINE / CODELINE PV40E60 TECHNICAL DRAW

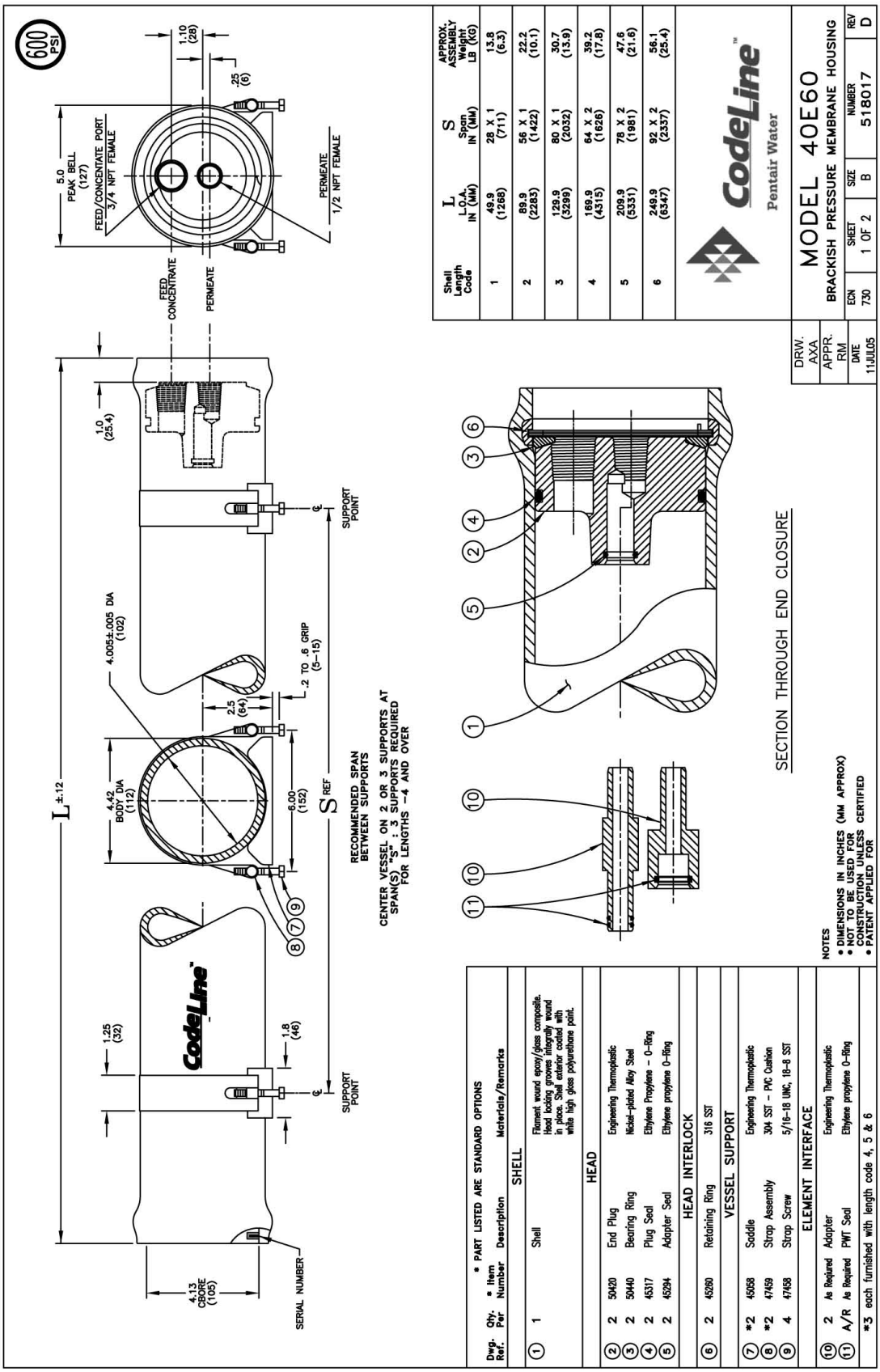

www.hytekintl.com info@hytekintl.com

RATING:

DESIGN PRESSURE..... 600 PSI at 120°F (4.1 MPa at 49°C)

MIN. OPERATING TEMP..... 20°F (−7°C)

FACTORY TEST PRESSURE..... 900 PSI (6.2 MPa)

BURST PRESSURE..... 3600 PSI (24.8 MPa)

INTENDED USE

The **CodeLine Model 40E60** Fiberglass RO Pressure Vessel is designed for continuous, long-term use as a housing for reverse osmosis membrane elements to desalt typical brackish waters at pressures up to 600 psi. Any make of four-inch nominal diameter spiral-wound element is easily accommodated; the appropriate interfacing hardware for the element specified is furnished with the vessel.

The CodeLine Model 40E60 must be installed, operated and maintained in accordance with the precautions listed and good industrial practice to assure safe operation over a long service life.

The high performance reinforced plastic shell must be allowed to expand under pressure; undue restraint at support points or piping connections can cause leaks to develop in the shell. The end closure, incorporating close-fitting, interlocking metal components, must be kept dry and free of corrosion; deterioration can lead to catastrophic mechanical failure of the head.

Pentair Water will assist the purchaser in determining the suitability of this standard vessel for their specific operating conditions. The final determination however, including evaluation of the standard materials of construction for compatibility with the specific corrosive environment, shall be the responsibility of the purchaser.

Specifications subject to change without notice.

PRECAUTIONS

DO... read, understand and follow all instructions; failure to take every precaution will void warranty and may result in vessel failure
DO... mount shell on horizontal membrane at central span "S" using compliant vessel supports furnished; tighten hold down straps just snug
DO... provide overpressure protection for vessel set at not more than 105% of design pressure
DO... inspect end closures regularly; replace components that have deteriorated and correct causes of corrosion

DO NOT... make rigid piping connections to ports or clamp vessel in any way that restricts growth of fiberglass shell under pressure; ▲DIA = 0.02 in. (0.5mm) and ▲L = 0.2 in. (5mm) for a length code −6 vessel
DO NOT... hang piping manifolds from threads or use vessel in any way to support other components.
DO NOT... operate vessel at pressures and temperatures in excess of its rating
DO NOT... operate vessel without a complete set of elements and interconnecting hardware
DO NOT... overtighten the connection to the permeate port (hand-tighten plus one-quarter turn, check for leaks.)
DO NOT... tolerate leaks or allow end closures to be routinely wetted in any way
DO NOT... pressurize vessel until double checking to verify that the Retaining Ring is in place and fully seated.
DO NOT... work on any component until first verifying that pressure is relieved from vessel
DO NOT... operate at pH levels below 3 or above 10

For complete information on proper use of this vessel please refer to the 40E Series USER'S GUIDE, Bulletin 526004

CAUTION:

EYE PROTECTION SHOULD BE WORN WHEN REMOVING OR INSTALLING RETAINING RINGS.

KEEP FINGERS CLEAR FROM RETAINING RING WHILE INSTALLING LAST OF TWO TURNS.

RING MAY SNAP INTO POSITION POSSIBLY PINCHING FINGERS.

ORDERING

Using the chart below, please check the features you require and fax them with your purchase order to our customer service department for expedited processing.
For optional materials and or feature not listed below, please consult the factory for pricing and availability.

Please note that we require your membrane brand and model number when ordering. If this information is not initially available, you may provide it at a later date by checking the appropriate box below

VESSEL LENGTH CODE – please check one

CODELINE MODEL 40E60 ☐−1 ☐−2 ☐−3 ☐−4 ☐−5 ☐−6

EXTERIOR FINISH – please check one

☐ **Standard – white high-gloss polyurethane coating over sanded surface.**
☐ Option – optional colors are available for 50 or more vessels per order. Call factory for pricing details.

CERTIFICATION – please check one

☐ **Standard – certified by Pentair Water, not code stamped.**
☐ Option – CE marked.

MEMBRANE BRAND AND MODEL – please check one and fill in information

☐ Please supply adapters for the following membrane brand and specific model.
Brand _____ Model _____

☐ Membrane brand and model information is not ~~currently~~ available, but will be supplied to CodeLine on or before the following date. ____/____/

MATERIAL AND PORT CONFIGURATIONS OPTIONS – please check one

☐ **Standard – all materials and port configurations per drawing 518017 on the opposite page.**

 © PENTAIR WATER

ADATTATORI PER PV 40E60 CODELINE / ADAPTERS CODELINE PV40E60

MARCA MEMBRANA MEMBRANA MAKE	MODELLO/MODEL	ADAPTER	TIPO DI ADAPTER ADAPTER TYPE
GE - Osmonics / DESAL			
	DURATHERM STD RO 4040	CA50015	Male/Maschio
	DURATHERM HWS RO 4040	CA50011	Female/Femmina
	DURASLICK RO 4040 HS	CA50011	Female/Femmina
	DURASLICK RO 4040	CA50011	Female/Femmina
	DURASLICK NF 4040 HS	CA50011	Female/Femmina
	DURASLICK NF 4040	CA50011	Female/Femmina
	CK4040FF	CA50011	Female/Femmina
	CG4040F	CA50015	Male/Maschio
	CE4040NF	CA50011	Female/Femmina
	CE4040FF	CA50011	Female/Femmina
	CE4040F	CA50015	Male/Maschio
	CE4040C	CA50015	Male/Maschio
	CD4040F	CA50015	Male/Maschio
	AK4040TF	CA50011	Female/Femmina
	AK4040NF	CA50011	Female/Femmina
	AK4040FF-CERT	CA50011	Female/Femmina
	AK4040FF	CA50011	Female/Femmina
	AK4040CF	CA50011	Female/Femmina
	AK4040C	CA50015	Male/Maschio
	AG4040TF	CA50011	Female/Femmina
	AG4040NF	CA50011	Female/Femmina
	AG4040FF-CERT	CA50011	Female/Femmina
	AG4040FF	CA50011	Female/Femmina
	AG4040CF	CA50011	Female/Femmina
	AG4040C	CA50015	Male/Maschio
	AD4040FF	CA50011	Female/Femmina
	AD4040F	CA50015	Male/Maschio
	AE4040FF	CA50011	Female/Femmina
	AG4040F	CA50015	Male/Maschio
	AG4040T	CA50015	Male/Maschio
	DK4040F	CA50015	Male/Maschio
	SC4040CZH	CA50015	Male/Maschio
	SC4040F	CA50015	Male/Maschio
	SE4040CZH	CA50015	Male/Maschio
	SE4040F	CA50015	Male/Maschio
	SG4040C	CA50015	Male/Maschio
	SG4040CZH	CA50015	Male/Maschio
	SG4040F	CA50015	Male/Maschio
	VinoPro 4040C-30D/CA50D	CA50015	Male/Maschio
	411	CA50045	Female/Femmina
	414	CA50011	Female/Femmina
	415	CA50011	Female/Femmina
Filmtec (DOW)			
	RO-4040-FF	CA50011	Female/Femmina
	HSRO-4040-FF	CA50011	Female/Femmina
	NF200-4040	CA50011	Female/Femmina
	NF270-4040	CA50011	Female/Femmina
	NF90-4040	CA50011	Female/Femmina
	NF-4040	CA50011	Female/Femmina
	SW30HR LE-4040	CA50011	Female/Femmina
	SW30-4040	CA50011	Female/Femmina
	XLE-4040	CA50011	Female/Femmina
	LP-4040	CA50011	Female/Femmina
	TW30-4040	CA50011	Female/Femmina

www.hytekintl.com info@hytekintl.com

MARCA MEMBRANA MEMBRANA MAKE	MODELLO/MODEL	ADAPTER	TIPO DI ADAPTER ADAPTER TYPE
	BW30-4040	CA50011	Female/Femmina
	BW30LE-4040	CA50011	Female/Femmina
	TW30HP-4040	CA50011	Female/Femmina
KOCH (Fluid Systems)			
	4321 UF	CA50014	Male/Maschio
	TFC-4820 FR	CA50011	Female/Femmina
	4720 SR2	CA50011	Female/Femmina
	4221 HR	CA50014	Male/Maschio
	4820 ULP	CA50011	Female/Femmina
	4040 ULP	CA50011	Female/Femmina
	4820 HR	CA50011	Female/Femmina
	4040 HR	CA50011	Female/Femmina
	1820 HF	CA50011	Female/Femmina
	1820 SS	CA50011	Female/Femmina
	PES4040UF	CA50011	Female/Femmina
	ROGA 40404CA	CA50011	Female/Femmina
	TFC 4040HF	CA50011	Female/Femmina
	TFC 4040S	CA50011	Female/Femmina
	TFC 4821 HR-NW	CA50014	Male/Maschio
	TFC 4821 HR-NWHS	CA50014	Male/Maschio
	TFC 4821 ULP	CA50014	Male/Maschio
	TFC 4920S	CA50011	Female/Femmina
	TFC 4921S	CA50014	Male/Maschio
Hydranautics			
	SWC1-4040	CA50011	Female/Femmina
	ESPA4-4040	CA50011	Female/Femmina
	ESPA3-4040	CA50011	Female/Femmina
	ESPA2-4040	CA50011	Female/Femmina
	ESPA1-4040	CA50011	Female/Femmina
	CPA2-4040	CA50011	Female/Femmina
	ESNA1-4040	CA50011	Female/Femmina
	LFC1-4040	CA50011	Female/Femmina
	LFC3-4040	CA50011	Female/Femmina
	SANRO CPA3	CA50011	Female/Femmina
	SANRO CPA4	CA50011	Female/Femmina
	SANRO-HS	CA50011	Female/Femmina
	SWC2-4040	CA50011	Female/Femmina
	NTR-759HR-S4	CA50013	Female/Femmina
Saehan - CSM			
	UE4040-PF	CA50011	Female/Femmina
	NE4040-70	CA50011	Female/Femmina
	NE4040-90	CA50011	Female/Femmina
	RE4040-SH	CA50011	Female/Femmina
	RE4040-SR	CA50011	Female/Femmina
	RE4040-SN	CA50011	Female/Femmina
	RE4040-FL	CA50011	Female/Femmina
	RE4040-FE	CA50011	Female/Femmina
	RE4040-BLF	CA50011	Female/Femmina
	RE4040-BLR	CA50011	Female/Femmina
	RE4040-BLN	CA50011	Female/Femmina
	RE4040-BN	CA50011	Female/Femmina
	RE4040-BE	CA50011	Female/Femmina
	RE4021-BN	CA50011	Female/Femmina

www.hytekintl.com info@hytekintl.com

MARCA MEMBRANA MEMBRANA MAKE	MODELLO/MODEL	ADAPTER	TIPO DI ADAPTER ADAPTER TYPE
Toray (Ro membra)			
	SC-6101	CA51465	Female/Femmina
	SC-4101	CA51465	Female/Femmina
	SC-2101	CA51465	Female/Femmina
	SU-610	CA51465	Female/Femmina
	SU-620	CA51465	Female/Femmina
	SUL-G10P	CA51465	Female/Femmina
	SU-710P	CA51465	Female/Femmina
	SUL-G10TS	CA51465	Female/Femmina
	SUL-G20FTS	CA51465	Female/Femmina
	SUL-G20TS	CA51465	Female/Femmina
	SU-720TS	CA51465	Female/Femmina
	SU-810	CA51465	Female/Femmina
	SUL-G10	CA51465	Female/Femmina
	SUL-G20F	CA51465	Female/Femmina
	SU-710R	CA51465	Female/Femmina
	SU-710L	CA51465	Female/Femmina
	SU-710	CA51465	Female/Femmina
	TM810L	CA50011	Female/Femmina
	TM810	CA50011	Female/Femmina
	TMG10	CA50011	Female/Femmina
	TM710	CA50011	Female/Femmina
	SU-210S	CA51465	Female/Femmina
Trisep			
	4040-TS80-TSF	CA50011	Female/Femmina
	4040-XN45-TSF	CA50011	Female/Femmina
	4040-ACM5-TWF	CA50011	Female/Femmina
	4040-ACM4-TSF	CA50011	Female/Femmina
	4040-ACM2-TSF	CA50011	Female/Femmina
	4040-SB20-TSA	CA50047	Male/Maschio
	4040-X201-TSF	CA50011	Female/Femmina

www.hytekintl.com info@hytekintl.com

PRESSURE VESSELS RO CODELINE 4"-1000 PSI PV 40E100 END PORT

PV 40E100 CODELINE

MATERIALE DI COMPOSIZIONE:
- Vessel: _____Vetroresina
- Tappi: _____Lega di alluminio 6061-T6
- Anello di chiusura tappo:_____ 316 SST
- Basamento tappo: _____ Lega di alluminio 6061-T6

DATI TECNICI
- Pressione di progetto: _____ 69 bar a 49°C (1000 psi a 120°F)
- Temperatura minima di esercizio: _____ -7°C (20°F)
- Pressione di collaudo:
• ASME 89,7 bar (1300 psi)
• CE 103 bar (1500 psi)
- Pressione di scoppio: _____ 414 bar (6000 psi)
- Uscita permeato: _____ 1/2" NPT Male
- Uscita concentrato: _____ 3/4" NPT Male
- Colore Standard: _____Bianco
- Connessione con membrana:___ Tramite adapter (2 x vessel, non inclusi, vedi documentazione tecnica)
- Nr. di elementi disponibili: _____1-2-3-4-5-6

CERTIFICATI:
- Ispezione e marcatura ASME CODE (quotazione su richiesta)
- Marcatura CE (quotazione su richiesta)
- Direttiva 97/23/CE (PED)
- NSF/ANSI 61
- ISO 9001:2000

APPLICAZIONI:
- Osmosi inversa;
- Ultrafiltrazione.

ACCESSORI DA ORDINARE A PARTE:
- Selle: CA45058 (nr. 2 per vessel fino al 3 elementi, dal 4 elementi fino al 6 elementi nr. 3 per vessel)
- Tiranti: CA47459 (nr. 2 per vessel fino al 3 elementi, dal 4 elementi fino al 6 elementi nr. 3 per vessel)
- Adapter: nr. 2 x vessel (vedi documentazione tecnica).

TRATTAMENTO DELLE ACQUE:
- Domestiche
- Industriali
- Municipali
- Reflue (conntattare l' Ufficio tecnico Hytek)
- di mare
- Farmaceutiche
- Alimentari

CODELINE PV 40E100

MATERIALS COMPOSITION:
- Shell material: _____Fiberglass
- Plugs: _____ 6061-T6 Hard anodized Alum. alloy
- Retaining ring _____ 316 SST
- Bearing ring _____ 6061-T6 Hard anodized Alum. alloyl

TECHNICAL SHEET:
- Design Pressure: _____ 69 bar a 49°C (1000 psi at 120°F)
- Min. Operating temperature: _____ -7°C (20°F)
- Factory Test Pressure:
• ASME 89,7 bar (1300 psi)
• CE 103 bar (1500 psi)
- Burst Pressure: _____ 414 bar (6000 psi)
-Permeate Port: _____ 1/2" NPT male
- Concentrate Port: _____ 3/4" NPT male
- Standard color: _____ White
- Connection membrane: _____ By Adapter (2 x vessel, not incuded, see technical documentation)
- Nr. elements available: _____1-2-3-4-5-6

CERTIFICATIONS:
- Inspection and ASME CODE stamped (quotation on request)
- CE mark stamped (quotation on request)
- 97/23/CE Directive (PED)
- NSF/ANSI 61
- ISO 9001:2000

APPLICATIONS:
- Reverse Osmose
- Ultrafiltration.

ACCESSORIES TO BE ORDERED SEPARATELY:
- Saddles: CA45058 (nr. 2 supports required up to 3 elements, 3 supports required for length 4 and over)
- Straps: CA47459 (nr. 2 straps required up to 3 elements, 3 supports required for length 4 and over)
- Adapter: nr. 2 x vessel (see technical documentation).

WATER TREATMENTS
- Domestics
- Industrials
- Municipals
- Drains (contact Hytek Technical Office)
- Sea
- Farmaceutics
- Alimentary

www.hytekintl.com info@hytekintl.com

DISEGNO TECNICO PV 40E100 CODELINE / CODELINE PV40E100 TECHNICAL DRAW

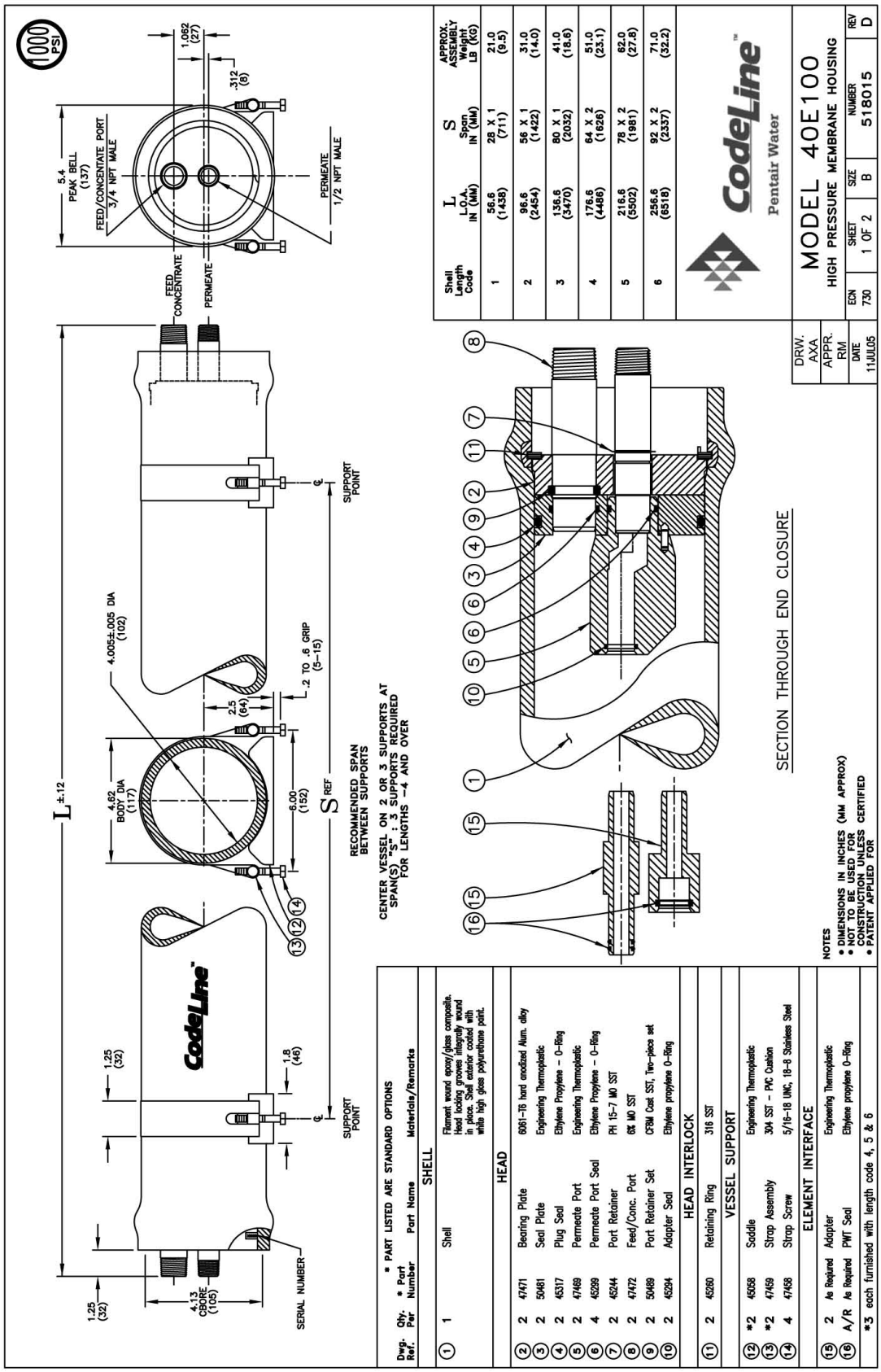

Shell Length Code	L L.O.A. IN (MM)	S Span IN (MM)	APPROX. ASSEMBLY Weight LB (KG)
1	56.6 (1438)	28 X 1 (711)	21.0 (9.5)
2	96.6 (2454)	56 X 1 (1422)	31.0 (14.0)
3	136.6 (3470)	80 X 1 (2032)	41.0 (18.6)
4	176.6 (4486)	64 X 2 (1626)	51.0 (23.1)
5	216.6 (5502)	78 X 2 (1981)	62.0 (27.8)
6	256.6 (6518)	92 X 2 (2337)	71.0 (32.2)

* PART LISTED ARE STANDARD OPTIONS

Dwg. Ref.	Qty. Per	* Part Number	Part Name	Materials/Remarks
			SHELL	
1	1		Shell	Filament wound epoxy/glass composite. Head locking grooves integrally wound in place. Shell exterior coated with white high gloss polyurethane paint.
			HEAD	
2	2	47471	Bearing Plate	6061-T6 hard anodized Alum. alloy
3	2	50481	Seal Plate	Engineering Thermoplastic
4	2	45317	Plug Seal	Ethylene Propylene – O-Ring
5	2	47469	Permeate Port	Engineering Thermoplastic
6	4	45209	Permeate Port Seal	Ethylene Propylene – O-Ring
7	2	45244	Port Retainer	PH 15-7 MO SST
8	2	47472	Feed/Conc. Port	6X MO SST
9	2	50489	Port Retainer Set	CF8M Cast SST, Two-piece set
10	2	45294	Adapter Seal	Ethylene propylene O-Ring
			HEAD INTERLOCK	
11	2	45260	Retaining Ring	316 SST
			VESSEL SUPPORT	
12	*2	45058	Saddle	Engineering Thermoplastic
13	*2	47459	Strap Assembly	304 SST – PVC Coatsion
14	4	47458	Strap Screw	5/16-18 UNC, 18-8 Stainless Steel
			ELEMENT INTERFACE	
15	2 As Required		Adapter	Engineering Thermoplastic
16	A/R As Required		PWT Seal	Ethylene propylene O-Ring

*3 each furnished with length code 4, 5 & 6

www.hytekintl.com info@hytekintl.com

RATING:

DESIGN PRESSURE..... 1000 PSI at 120°F (6.9 MPa at 49°C)

MIN. OPERATING TEMP..... 20°F (−7°C)

FACTORY TEST PRESSURE.. ASME / CE
1300PSI 1500PSI
(8.96 MPa)(10.3 MPa)

BURST PRESSURE..... 6000 PSI (41.4 MPa)

INTENDED USE

The **CodeLine Model 40E100** Fiberglass RO Pressure Vessel is designed for continuous, long-term use as a housing for reverse osmosis membrane elements to desalt typical seawater at pressures up to 1000 psi. Any make of four-inch nominal diameter spiral-wound element is easily accommodated; the appropriate interfacing hardware for the element specified is furnished with the vessel.

The CodeLine Model 40E100 is designed in accordance with the engineering standards of the Boiler and Pressure Vessel Code of the American Society of Mechanical Engineers (ASME Code). At small additional cost, vessels can be inspected during construction by an ASME Authorized Inspector and ASME Code stamped.

The CodeLine Model 40E100 must be installed, operated and maintained in accordance with the precautions listed and good industrial practice to assure safe operation over a long service life.

The high performance reinforced plastic shell must be allowed to expand under pressure; undue restraint at support points or piping connections can cause leaks to develop in the shell. The end closure, incorporating close-fitting, interlocking metal components, must be kept dry and free of corrosion; deterioration can lead to catastrophic mechanical failure of the head.

Pentair Water will assist the purchaser in determining the suitability of this standard vessel for their specific operating conditions. The final determination however, including evaluation of the standard materials of construction for compatibility with the specific corrosive environment, shall be the responsibility of the purchaser.

Specifications subject to change without notice.

PRECAUTIONS

DO... read, understand and follow all instructions; failure to take every precaution will void warranty and may result in vessel failure
DO... mount shell on horizontal members at central span "S" using compliant vessel supports furnished; tighten hold down straps just snug
DO... provide overpressure protection for vessel set at not more than 105% of design pressure
DO... inspect end closures regularly; replace components that have deteriorated and correct causes of corrosion

DO NOT... make rigid piping connections to ports or clamp vessel in any way that restricts growth of fiberglass shell under pressure; ▲DIA = 0.02 in. (0.5mm) and ▲L = 0.2 in. (5mm) for a length code −6 vessel
DO NOT... hang piping manifolds from ports or use vessel in any way to support other components.
DO NOT... operate vessel at pressures and temperatures in excess of its rating
DO NOT... operate vessel without permeate ports internally connected with a complete set of elements and and interconnecting hardware
DO NOT... operate vessel with permeate pressure in excess of 125 psi at 120°F (0.9 MPa at 49°C)
DO NOT... overtighten the connection to the permeate port (hand-tighten plus one-quarter turn, check for leaks.)
DO NOT... tolerate leaks or allow end closures to be routinely wetted in any way
DO NOT... pressurize vessel until double checking to verify that the Retaining Ring is in place and fully seated.
DO NOT... work on any component until first verifying that pressure is relieved from vessel
DO NOT... operate at pH levels below 3 or above 10

For complete information on proper use of this vessel please refer to the 40E Series USER'S GUIDE, Bulletin 526005

CAUTION:

EYE PROTECTION SHOULD BE WORN WHEN REMOVING OR INSTALLING RETAINING RINGS.

KEEP FINGERS CLEAR FROM RETAINING RING WHILE INSTALLING LAST OF TWO TURNS.

RING MAY SNAP INTO POSITION POSSIBLY PINCHING FINGERS.

ORDERING

Using the chart below, please check the features you require and fax them with your purchase order to our customer service department for expedited processing.
For optional materials and or feature not listed below, please consult the factory for pricing and availability.

Please note that we require your membrane brand and model number when ordering. If this information is not initially available, you may provide it at a later date by checking the appropriate box below

VESSEL LENGTH CODE – please check one

CODELINE MODEL 40E100 ☐−1 ☐−2 ☐−3 ☐−4 ☐−5 ☐−6

EXTERIOR FINISH – please check one

☐ **Standard – white high-gloss polyurethane coating over sanded surface.**
☐ Option – optional colors are available for 50 or more vessels per order. Call factory for pricing details.

CERTIFICATION – please check one

☐ **Standard – certified by Pentair Water, not code stamped.**
☐ Option – Certified by ASME Authorized Inspector, Code stamped and registered with National Board. Call factory for pricing details.
☐ Option – CE marked.

MEMBRANE BRAND AND MODEL – please check one and fill in information

☐ Please supply adapters for the following membrane brand and specific model.
Brand _____ Model _____

☐ Membrane brand and model information is not currently available, but will be supplied to CodeLine on or before the following date. ____/____/____

MATERIAL AND PORT CONFIGURATIONS OPTIONS – please check one

☐ **Standard – all materials and port configurations per drawing 518015 on the opposite page.**
☐ **Option – feed/concentrate port, 3/4" victaulic.**

DWG. NO. 518015D ©PENTAIR WATER Page 2 of 2.

ADATTATORI PER PV 40E100 CODELINE / ADAPTERS CODELINE PV40E100

MARCA MEMBRANA MEMBRANA MAKE	MODELLO/MODEL	ADAPTER	TIPO DI ADAPTER ADAPTER TYPE
GE - Osmonics / DESAL			
	DURATHERM STD RO 4040	CA50130	Male/Maschio
	DURATHERM HWS RO 4040	CA50137	Female/Femmina
	DURASLICK RO 4040 HS	CA50137	Female/Femmina
	DURASLICK RO 4040	CA50137	Female/Femmina
	DURASLICK NF 4040 HS	CA50137	Female/Femmina
	DURASLICK NF 4040	CA50137	Female/Femmina
	CK4040FF	CA50137	Female/Femmina
	CG4040F	CA50130	Male/Maschio
	CE4040NF	CA50137	Female/Femmina
	CE4040FF	CA50137	Female/Femmina
	CE4040F	CA50130	Male/Maschio
	CE4040C	CA50130	Male/Maschio
	CD4040F	CA50130	Male/Maschio
	AK4040TF	CA50137	Female/Femmina
	AK4040NF	CA50137	Female/Femmina
	AK4040FF-CERT	CA50137	Female/Femmina
	AK4040FF	CA50137	Female/Femmina
	AK4040CF	CA50137	Female/Femmina
	AK4040C	CA50130	Male/Maschio
	AG4040TF	CA50137	Female/Femmina
	AG4040NF	CA50137	Female/Femmina
	AG4040FF-CERT	CA50137	Female/Femmina
	AG4040FF	CA50137	Female/Femmina
	AG4040CF	CA50137	Female/Femmina
	AG4040C	CA50130	Male/Maschio
	AD4040FF	CA50137	Female/Femmina
	AD4040F	CA50130	Male/Maschio
	AE4040FF	CA50136	Female/Femmina
	AG4040F	CA50130	Male/Maschio
	AG4040T	CA50130	Male/Maschio
	DK4040F	CA50130	Male/Maschio
	SC4040CZH	CA50130	Male/Maschio
	SC4040F	CA50130	Male/Maschio
	SE4040CZH	CA50130	Male/Maschio
	SE4040F	CA50130	Male/Maschio
	SG4040C	CA50130	Male/Maschio
	SG4040CZH	CA50130	Male/Maschio
	SG4040F	CA50130	Male/Maschio
	VinoPro 4040C-30D/50D	CA50130	Male/Maschio
	411	CA50122	Female/Femmina
	414	CA50136	Female/Femmina
	415	CA50136	Female/Femmina
Filmtec (DOW)			
	RO-4040-FF	CA50137	Female/Femmina
	HSRO-4040-FF	CA50137	Female/Femmina
	NF200-4040	CA50137	Female/Femmina
	NF270-4040	CA50137	Female/Femmina
	NF90-4040	CA50137	Female/Femmina
	NF-4040	CA50137	Female/Femmina
	SW30HR LE-4040	CA50137	Female/Femmina
	SW30-4040	CA50137	Female/Femmina
	XLE-4040	CA50137	Female/Femmina
	LP-4040	CA50137	Female/Femmina
	TW30-4040	CA50137	Female/Femmina

www.hytekintl.com info@hytekintl.com

MARCA MEMBRANA MEMBRANA MAKE	MODELLO/MODEL	ADAPTER	TIPO DI ADAPTER ADAPTER TYPE
	BW30-4040	CA50137	Female/Femmina
	BW30LE-4040	CA50137	Female/Femmina
	ROGA 04221 HR	CA50124	Male/Maschio
KOCH (Fluid Systems)			
	4321 UF	CA50125	Male/Maschio
	TFC-4820 FR	CA50137	Female/Femmina
	4720 SR2	CA50137	Female/Femmina
	4221 HR	CA50125	Male/Maschio
	4820 ULP	CA50137	Female/Femmina
	4040 ULP	CA50137	Female/Femmina
	4820 HR	CA50137	Female/Femmina
	4040 HR	CA50137	Female/Femmina
	1820 HF	CA50137	Female/Femmina
	1820 SS	CA50137	Female/Femmina
Hydranautics			
	SWC1-4040	CA50137	Female/Femmina
	ESPA4-4040	CA50137	Female/Femmina
	ESPA3-4040	CA50137	Female/Femmina
	ESPA2-4040	CA50137	Female/Femmina
	ESPA1-4040	CA50137	Female/Femmina
	CPA2-4040	CA50137	Female/Femmina
	ESNA1-4040	CA50137	Female/Femmina
	LFC1-4040	CA50137	Female/Femmina
	LFC3-4040	CA50137	Female/Femmina
	SANRO CPA3	CA50137	Female/Femmina
	SANRO CPA4	CA50137	Female/Femmina
	SANRO-HS	CA50137	Female/Femmina
	SWC2-4040	CA50137	Female/Femmina
Saehan - CSM			
	UE4040-PF	CA50137	Female/Femmina
	NE4040-70	CA50137	Female/Femmina
	NE4040-90	CA50137	Female/Femmina
	RE4040-SH	CA50137	Female/Femmina
	RE4040-SR	CA50137	Female/Femmina
	RE4040-SN	CA50137	Female/Femmina
	RE4040-FL	CA50137	Female/Femmina
	RE4040-FE	CA50137	Female/Femmina
	RE4040-BLF	CA50137	Female/Femmina
	RE4040-BLR	CA50137	Female/Femmina
	RE4040-BLN	CA50137	Female/Femmina
	RE4040-BN	CA50137	Female/Femmina
	RE4040-BE	CA50137	Female/Femmina
	RE4021-BN	CA50137	Female/Femmina
Trisep			
	4040-TS80-TSF	CA50137	Female/Femmina
	4040-XN45-TSF	CA50137	Female/Femmina
	4040-ACM5-TWF	CA50137	Female/Femmina
	4040-ACM4-TSF	CA50137	Female/Femmina
	4040-ACM2-TSF	CA50137	Female/Femmina
	4040-SB20-TSA	CA50142	Male/Maschio
	4040-X201-TSF	CA50137	Female/Femmina

www.hytekintl.com info@hytekintl.com

MARCA MEMBRANA MEMBRANA MAKE	MODELLO/MODEL	ADAPTER	TIPO DI ADAPTER ADAPTER TYPE
Toray (Romembra)			
	SC-6101	CA51466	Female
	SC-4101	CA51466	Female
	SC-2101	CA51466	Female
	SU-610	CA51466	Female
	SU-620	CA51466	Female
	SUL-G10P	CA51466	Female
	SU-710P	CA51466	Female
	SUL-G10TS	CA51466	Female
	SUL-G20FTS	CA51466	Female
	SUL-G20TS	CA51466	Female
	SU-720TS	CA51466	Female
	SU-810	CA51466	Female
	SUL-G10	CA51466	Female
	SUL-G20F	CA51466	Female
	SU-710R	CA51466	Female
	SU-710L	CA51466	Female
	SU-710	CA51466	Female
	TM810L	CA50137	Female
	TM810	CA50137	Female
	TMG10	CA50137	Female
	TM710	CA50137	Female

www.hytekintl.com info@hytekintl.com

PRESSURE VESSELS RO CODELINE 8"-300 PSI PV 80E30 END PORT

PV 80E30 CODELINE

MATERIALE DI COMPOSIZIONE:
- Vessel: _____Vetroresina
- Tappi: _____Lega di alluminio 6061-T6
- Anello di chiusura tappo:_____ 316 SST
- Basamento tappo: _____ Lega di alluminio 6061-T6
- Selle (incluse): _____ materiale termoplastico (nr. 2 per vessel fino al 3 elementi, dal 4 elementi fino al 6 elementi nr. 3 per vessel).
- Tiranti (inclusi):_____in AISI 304 e cuscini in PVC (nr. 2 per vessel fino al 3 elementi, dal 4 elementi fino al 6 elementi nr. 3 per vessel).

DATI TECNICI
- Pressione di progetto: _____ 21 bar a 49°C (300 psi a 120°F)
- Temperatura minima di esercizio: _____ -7°C (20°F)
- Pressione di collaudo:
• ASME 27 bar (390 psi)
• CE 31 bar (450 psi)
- Pressione di scoppio: _____ 124 bar (1800 psi)
- Uscita permeato: _____ 1" NPT femmina
- Uscita concentrato: _____ 1 1/2" in AISI 316 connessione per giunto victaulic (giunto victaulic non incluso)
- Colore Standard: _____Bianco
- Connettori per membrana (non inclusi):___ Tramite adapter (2 x vessel, vedi documentazione tecnica)
- Nr. di elementi disponibili: _____1-2-3-4-5-6-7

CERTIFICATI:
- Ispezione e marcatura ASME CODE (quotazione su richiesta)
- Marcatura CE (quotazione su richiesta)
- Direttiva 97/23/CE (PED)
- NSF/ANSI 61
- ISO 9001:2000

APPLICAZIONI:
- Osmosi inversa;
- Ultrafiltrazione.

ACCESSORI DA ORDINARE A PARTE:
- Adapter: nr. 2 x vessel (vedi documentazione tecnica).
- Giunti Victaulic 1 1/2" VIC0001

TRATTAMENTO DELLE ACQUE:
- Domestiche
- Industriali
- Municipali
- Reflue (conntattare l' Ufficio tecnico Hytek)
- di mare
- Farmaceutiche
- Alimentari

CODELINE PV 80E30

MATERIALS COMPOSITION:
- Shell material: _____Fiberglass
- Plugs: _____ 6061-T6 Hard anodized Alum. alloy
- Retaining ring _____ 316 SST
- Bearing ring _____ 6061-T6 Hard anodized Alum. alloyl
- Saddles (included): _____Engineering thermoplastic ((nr. 2 supports required up to 3 elements, 3 supports required for length 4 and over)
- Straps (included): _____AISI 304 and cushion in PVC (nr. 2 straps required up to 3 elements, 3 supports required for length 4 and over)

TECHNICAL SHEET:
- Design Pressure: _____ 21 bar a 49°C (300 psi at 120°F)
- Min. Operating temperature: _____ -7°C (20°F)
- Factory Test Pressure:
• ASME 27 bar (390 psi)
• CE 31 bar (450 psi)
- Burst Pressure: _____ 124 bar (1800 psi)
-Permeate Port: _____ 1" NPT female
- Concentrate Port: _____1 1/2" in AISI 316 connection for victaulic joint (victaulic joint not included)
- Standard color: _____ White
- Connection for membrane (not included): _____ By Adapter (2 x vessel, see technical documentation)
- Nr. elements available: _____1-2-3-4-5-6-7

CERTIFICATIONS:
- Inspection and ASME CODE stamped (quotation on request)
- CE mark stamped (quotation on request)
- 97/23/CE Directive (PED)
- NSF/ANSI 61
- ISO 9001:2000

APPLICATIONS:
- Reverse Osmose
- Ultrafiltration.

ACCESSORIES TO BE ORDERED SEPARATELY:
- Adapter: 2 x vessel, see technical documentation
- Victaulic Joints 1 1/2" VIC0001

WATER TREATMENTS
- Domestics
- Industrials
- Municipals
- Drains (contact Hytek Technical Office)
- Sea
- Farmaceutics
- Alimentary

www.hytekintl.com info@hytekintl.com

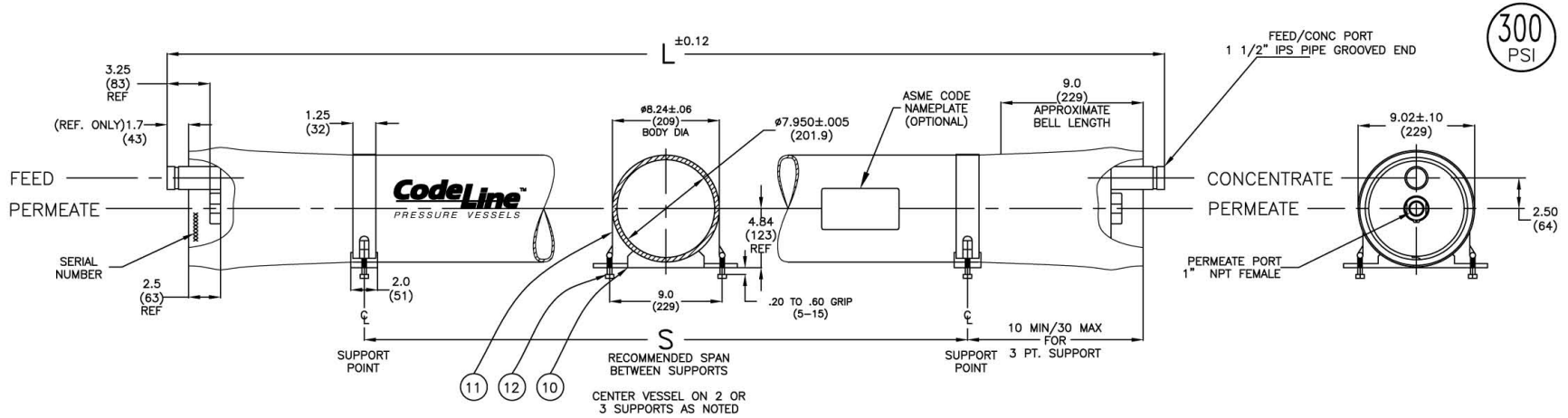

DWG REF	QTY	PART NUMBER	DESCRIPTION	MATERIAL
			SHELL	
01	1	ORDER SECTION	SHELL	Filament Wound Epoxy/Glass composites - SS Head locking grooves integrally wound in place.
			HEAD	
02	2	51050	Bearing Plate	6061-T6 Aluminium Alloy-Hard Anodized.
03	2	96003	Sealing Plate	Engineering Thermoplastic.
04	2	50607	Feed/Conc Port	316 Stainless Steel.
05	4	45247	Port Retainer	304 Stainless Steel.
06	2	50608	Permeate Port	Engineering Thermoplastic.
07	2	96000	Head Seal	Ethylene Propylene - O Ring.(442)
08	4	45312	Port Seal	Ethylene Propylene - O Ring.(225)
			HEAD INTERLOCK	
09	2	47336	Retaining Ring	316 Stainless Steel
			VESSEL SUPPORT	
10	*2	52169	Saddle	Engineering Thermoplastic.
11	*2	45042	Strap Assy.	304 Stainless Steel - PVC cushion
12	4	46265	Strap screw.	5/16-18 UNC, 18-8 Stainless Steel.
			ELEMENT INTERFACE	
13	2	A/R	Adapter	Engineering Thermoplastic.
14	4	A/R	PWT Seal	Ethylene Propylene - O - Ring
15	2	52245	Adapter seal	Ethylene Propylene - O - Ring (124)
16	1	45069	Thrust Ring	Engineering Thermoplastic.

* 3 Each Furnished With Length code 4, 5, 6 & 7.

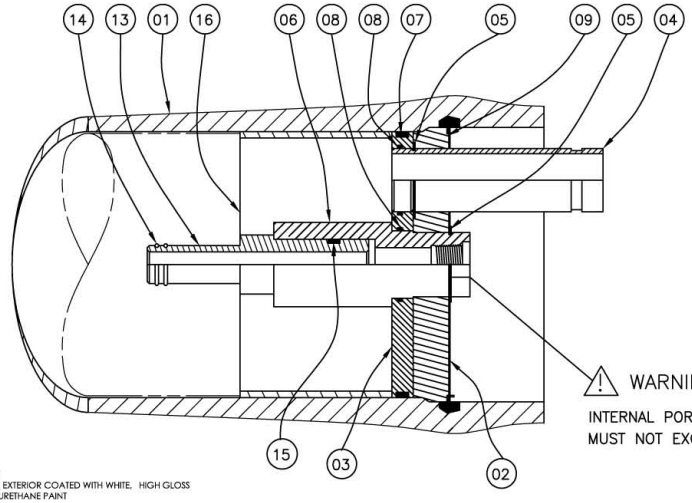

WARNING !

INTERNAL PORT PRESSURE MUST NOT EXCEED 125 PSI

SECTION THROUGH END CLOSURE

ITEM 16 DOWNSTREAM ONLY

NOTES
- *SHELL EXTERIOR COATED WITH WHITE, HIGH GLOSS POLYURETHANE PAINT
- *DIMENSIONS ARE IN INCHES (MM APPROX.)
- *NOT TO BE USED FOR CONSTRUCTION UNLESS CERTIFIED.
- *GENERAL TOLERANCES APPLY, FOR DETAILS CONTACT FACTORY.
- *L.O.A REFERS TO OVERALL LENGTH OF THE VESSEL.
- *EMPTY WEIGHT REFERS TO SHELL WEIGHT INCLUDING HEAD ASSEMBLIES WITHOUT MEMBRANES.

Shell Length Code	L L.O.A. IN (MM)	S Span IN (MM)	Empty Weight LB (KG)
1	61 (1549)	40 X 1 (1016)	33 (15)
2	101 (2565)	80 X 1 (2032)	44 (20)
3	141 (3581)	120 X 1 (3048)	55 (25)
4	181 (4597)	80 X 2 (2032)	66 (30)
5	221 (5613)	100 X 2 (2540)	77 (35)
6	261 (6629)	120 X 2 (3048)	88 (40)
7	301 (7645)	140 X 2 (3556)	99 (45)

CodeLine™ Pentair Water

ENGR IS	MODEL 80E30 MEMBRANE HOUSING				
QLTY HP					
DATE 24MAY02	SCALE	SHEET	SIZE	NUMBER	REV
ECN 697, 646	NONE	1 OF 2	B	99111	F

RATING:

DESIGN PRESSURE……..….300 PSI at 120°F (2.1 MPa @ 49°C)
MIN. OPERATING TEMP……..……..20°F (-7°C)
FACTORY TEST PRESSURE……CE / ASME 450 / 390 PSI (3.1Mpa) / (2.7 MPa)
BURST PRESSURE……..……..…..1800 PSI (12.4 MPa)

INTENDED USE:

The CodeLine Model 80E30 Fiberglass RO Pressure Vessel is designed for continuous, long term use as a housing for reverse osmosis membrane elements to desalt typical brackish waters at pressures up to 300 psi. Any make of eight-inch nominal diameter spiral-wound element is easily accommodated; the appropriate interfacing hardware for the element specified is furnished with the vessel.

The CodeLine Model 80E30 is designed in accordance with the engineering standards of the Boiler and Pressure Vessel Code of the American Society of Mechanical Engineers (ASME Code). At small additional cost, vessels can be inspected during construction by an ASME Authorized inspector and ASME Code stamped.

The CodeLine Model 80E30 must be installed, operated and maintained in accordance with the listed precautions and good industrial practice to assure safe operation over a long service life.

The high performance reinforced plastic shell must be allowed to expand under pressure; undue restraint at support points or piping connections can cause leaks to develop in the shell. The end closure, incorporating close fitting, interlocking metal components, must be kept dry and free of corrosion; deterioration can lead to catastrophic mechanical failure of the head.

The end closures, incorporating close-fitting, interlocking metal components, must be kept dry and free of corrosion; deterioration can lead to catastrophic mechanical failure of the heads.

Pentair Water will assist the purchaser in determining the suitability of this standard vessel for their specific operating conditions. The final determination however, including evaluation of the standard material of construction for compatibility with the specific corrosive environment, shall be the responsibility of the purchaser.

Specifications are subject to change without notice.

PRECAUTIONS:

DO…read, understand and follow all instructions; failure to take every precaution will void warranty and may result in vessel failure
DO…mount the shell on horizontal members at span "S" using complaint vessel supports furnished; tighten hold down straps just snug
DO…provide overpressure protection for vessel set at not more than 105% of design pressure
DO…inspect end closures regularly; replace components that have deteriorated and correct causes of corrosion

DO NOT… make rigid piping connections to ports or clamp vessel in any way that resists growth of fiberglass shell under pressure; ΔDIA = 0.015 in. (0.4mm) and ΔL = 0.2 in. (5mm) for a length code –7 vessel
DO NOT… hang piping manifolds from ports or use vessel in any way to support other components; branch connection piping may be simply supported between the header and port; maximum weight of branch piping; feed/concentrate – 16 lbs (7.3 kg); permeate – 8 lbs (3.6 kg)
DO NOT… operate vessel at pressures and temperatures in excess of its rating
DO NOT… operate vessel without permeate ports internally connected with a complete set of elements and interconnecting hardware
DO NOT… operate vessel with permeate pressure in excess of 125 psi at 120°F (0.86 MPa @ 49°C)
DO NOT… overtighten the connection to the permeate port (hand-tighten plus one-quarter turn, check for leaks)
DO NOT… tolerate leaks or allow end closures to be routinely wetted in any way
DO NOT… pressurize vessel until double-checking to verify that the retaining ring is completely inside the groove
DO NOT… work on any component until first verifying that pressure is relieved from vessel
DO NOT… operate at pH levels below 3 or above 10

ORDERING:

Using the chart below, please check the features you require and fax them with your purchase order to our customer service department for expedited processing.
For optional materials and/or features not listed below, please consult factory for pricing and availability.

Please note that we require your membrane brand and model number when ordering. If this information is not initially available, you may provide it at a later date by checking the appropriate box below.

VESSEL LENGTH CODE – please check one

MODEL 80E30 ☐ -1 ☐ -2 ☐ -3 ☐ -4 ☐ -5 ☐ -6 ☐ -7

MEMBRANE BRAND AND MODEL – please check one and fill in information

☐ Please supply adapters for the following membrane brand and specific model
Brand_____Model_____

CERTIFICATION REQUIRED

❑ ASME Stamped and National Board Registered (please consult factory for pricing)
❑ CE Marked
❑ Standard, Certified by Pentair water.

EXTERIOR FINISH – please check one

☐ Standard – white high-gloss polyurethane coating.
☐ Option – optional colors are available for 50 or more vessels per order. Call factory for pricing details.

MATERIAL OPTIONS

❑ Standard – All materials as per drawing 99111 on the first page.
❑ Customer specified materials: -
(Please consult the factory, as these options will affect pricing and vessel lead-time.)

For complete information on proper use of this vessel please refer to the 80E series USER'S GUIDE Bulletin 523004.

PRESSURE VESSELS RO CODELINE 8"-450 PSI PV 80E45 END PORT

PV 80E45 CODELINE

MATERIALE DI COMPOSIZIONE:
- Vessel: _____Vetroresina
- Tappi: _____Lega di alluminio 6061-T6
- Anello di chiusura tappo:_____ 316 SST
- Basamento tappo: _____ Lega di alluminio 6061-T6
- Selle (incluse): _____ materiale termoplastico (nr. 2 per vessel fino al 3 elementi, dal 4 elementi fino al 6 elementi nr. 3 per vessel).
- Tiranti (inclusi):_____in AISI 304 e cuscini in PVC (nr. 2 per vessel fino al 3 elementi, dal 4 elementi fino al 6 elementi nr. 3 per vessel).

DATI TECNICI
- Pressione di progetto: _____ 31 bar a 49°C (450 psi a 120°F)
- Temperatura minima di esercizio: _____ -7°C (20°F)
- Pressione di collaudo:
• ASME 40 bar (585 psi)
• CE 46 bar (675 psi)
- Pressione di scoppio: _____ 186 bar (2700 psi)
- Uscita permeato: _____ 1" NPT femmina
- Uscita concentrato: _____ 1 1/2" in AISI 316 connessione per giunto victaulic (giunto victaulic non incluso)
- Colore Standard: _____Bianco
- Connettori per membrana (non inclusi):___ Tramite adapter (2 x vessel, vedi documentazione tecnica)
- Nr. di elementi disponibili: _____1-2-3-4-5-6-7

CERTIFICATI:
- Ispezione e marcatura ASME CODE (quotazione su richiesta)
- Marcatura CE (quotazione su richiesta)
- Direttiva 97/23/CE (PED)
- NSF/ANSI 61
- ISO 9001:2000

APPLICAZIONI:
- Osmosi inversa;
- Ultrafiltrazione.

ACCESSORI DA ORDINARE A PARTE:
- Adapter: nr. 2 x vessel (vedi documentazione tecnica).
- Giunti Victaulic 1 1/2" VIC0001

TRATTAMENTO DELLE ACQUE:
- Domestiche
- Industriali
- Municipali
- Reflue (conntattare l' Ufficio tecnico Hytek)
- di mare
- Farmaceutiche
- Alimentari

CODELINE PV 80E45

MATERIALS COMPOSITION:
- Shell material: _____Fiberglass
- Plugs: _____ 6061-T6 Hard anodized Alum. alloy
- Retaining ring _____ 316 SST
- Bearing ring _____ 6061-T6 Hard anodized Alum. alloyl
- Saddles (included): _____Engineering thermoplastic ((nr. 2 supports required up to 3 elements, 3 supports required for length 4 and over)
- Straps (included): _____AISI 304 and cushion in PVC (nr. 2 straps required up to 3 elements, 3 supports required for length 4 and over)

TECHNICAL SHEET:
- Design Pressure: _____ 31 bar a 49°C (450 psi at 120°F)
- Min. Operating temperature: _____ -7°C (20°F)
- Factory Test Pressure:
• ASME 40 bar (585 psi)
• CE 46 bar (675 psi)
- Burst Pressure: _____ 186 bar (2700 psi)
-Permeate Port: _____ 1" NPT female
- Concentrate Port: _____1 1/2" in AISI 316 connection for victaulic joint (victaulic joint not included)
- Standard color: _____ White
- Connection for membrane (not included): _____ By Adapter (2 x vessel, see technical documentation)
- Nr. elements available: _____1-2-3-4-5-6-7

CERTIFICATIONS:
- Inspection and ASME CODE stamped (quotation on request)
- CE mark stamped (quotation on request)
- 97/23/CE Directive (PED)
- NSF/ANSI 61
- ISO 9001:2000

APPLICATIONS:
- Reverse Osmose
- Ultrafiltration.

ACCESSORIES TO BE ORDERED SEPARATELY:
- Adapter: 2 x vessel, see technical documentation
- Victaulic Joints 1 1/2" VIC0001

WATER TREATMENTS
- Domestics
- Industrials
- Municipals
- Drains (contact Hytek Technical Office)
- Sea
- Farmaceutics
- Alimentary

www.hytekintl.com info@hytekintl.com

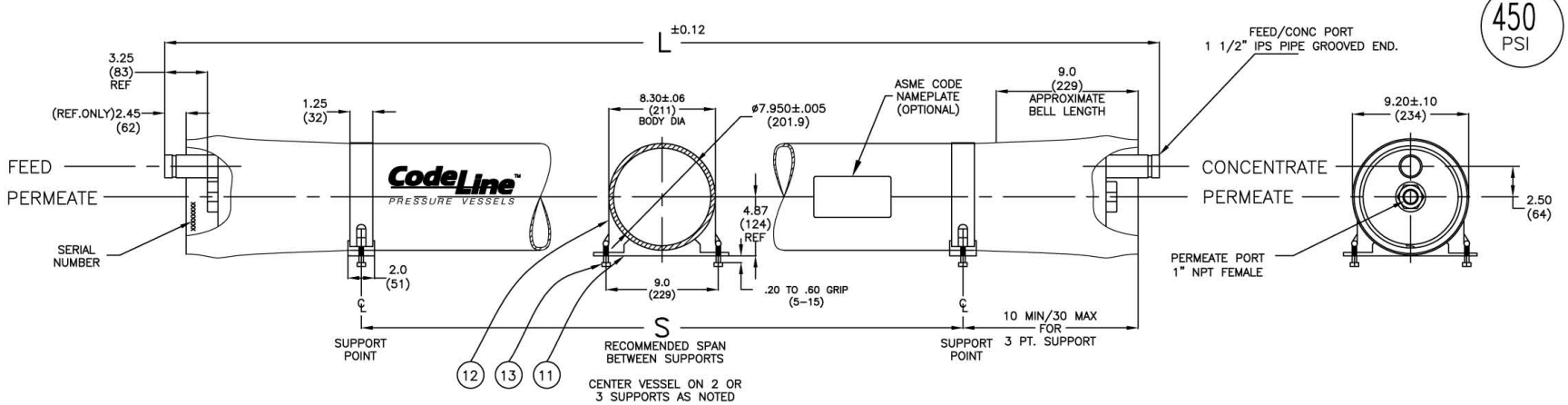

DWG REF	QTY	PART NUMBER	DESCRIPTION	MATERIAL
			SHELL	
01	1	ORDER SECTION	SHELL	Filament Wound Epoxy/Glass composites - SS Head locking grooves integrally wound in place.
			HEAD	
02	2	51051	Bearing Plate	6061-T6 Aluminium Alloy-Hard Anodized.
03	2	96003	Sealing Plate	Engineering Thermoplastic.
04	2	50567	Feed/Conc Port	316 Stainlesss Steel.
05	2	45090	Port Retainer Set	CF8M Cast SS, Two-piece set.
06	2	50569	Permeate Port	Engineering Thermoplastic.
07	2	45066	Port Nut	Engineering Thermoplastic.
08	2	96000	Head Seal	Ethylene Propylene - O Ring.(442)
09	4	45312	Port Seal	Ethylene Propylene - O Ring.(225)
			HEAD INTERLOCK	
10	2	47336	Retaining Ring	316 Stainless Steel.
			VESSEL SUPPORT	
11	*2	52169	Saddle	Engineering Thermoplastic.
12	*2	45042	Strap Assy.	304 Stainless Steel - PVC cushion
13	4	46265	Strap screw.	5/16-18 UNC, 18-8 Stainless Steel.
			ELEMENT INTERFACE	
14	2	A/R	Adapter	Engineering Thermoplastic.
15	4	A/R	PWT Seal	Ethylene Propylene - O - Ring
16	2	52245	Adapter seal	Ethylene Propylene - O - Ring (124)
17	1	45069	Thrust Ring	Engineering Thermoplastic.
* 3 Each Furnished With Length Code 4, 5, 6 & 7.				

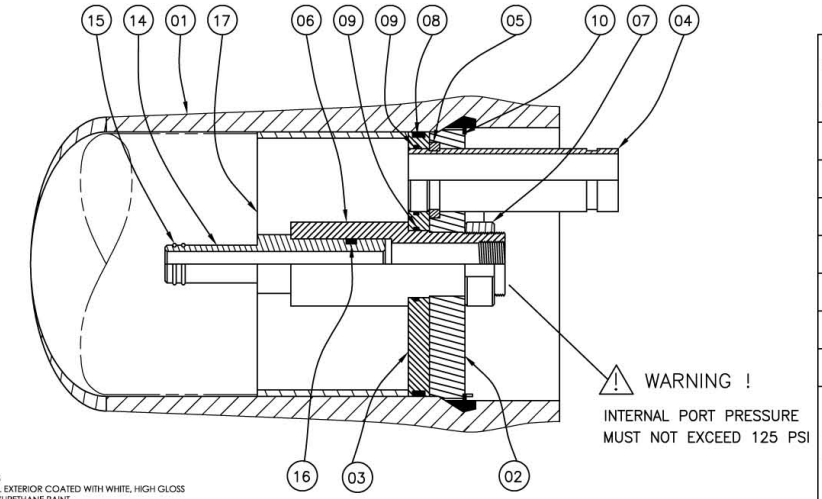

NOTES
*SHELL EXTERIOR COATED WITH WHITE, HIGH GLOSS POLYURETHANE PAINT
*DIMENSIONS ARE IN INCHES (MM APPROX.)
*NOT TO BE USED FOR CONSTRUCTION UNLESS CERTIFIED.
*GENERAL TOLERANCES APPLY, FOR DETAILS CONTACT FACTORY.
*L.O.A REFERS TO OVERALL LENGTH OF THE VESSEL.
*EMPTY WEIGHT REFERS TO SHELL WEIGHT INCLUDING HEAD ASSEMBLIES WITHOUT MEMBRANES.

SECTION THROUGH END CLOSURE

ITEM 17 DOWNSTREAM ONLY

Shell Length Code	L L.O.A. IN (MM)	S Span IN (MM)	Empty Weight LB (KG)
1	63 (1600)	40 X 1 (1016)	32 (15)
2	103 (2616)	80 X 1 (2032)	47 (21)
3	143 (3632)	120 X 1 (3048)	61 (28)
4	183 (4648)	80 X 2 (2032)	76 (34)
5	223 (5664)	100 X 2 (2540)	90 (41)
6	263 (6680)	120 X 2 (3048)	105 (48)
7	303 (7696)	140 X 2 (3556)	119 (54)

CodeLine™ Pentair Water

ENGR IS	MODEL 80E45 MEMBRANE HOUSING				
QLTY HP					
DATE 24MAY02	SCALE	SHEET	SIZE	NUMBER	REV
ECN 646	NONE	1 OF 2	B	99112	E

RATING:

DESIGN PRESSURE……450 PSI at 120°F (3.1 MPa @ 49°C)
MIN. OPERATING TEMP……..……20°F (-7°C)
FACTORY TEST PRESSURE……..CE / ASME 675 / 585 PSI (4.65Mpa) / (4 MPa)
BURST PRESSURE……..……2700 PSI (18.6 MPa)

INTENDED USE:

The CodeLine Model 80E45 Fiberglass RO Pressure Vessel is designed for continuous, long term use as a housing for reverse osmosis membrane elements to desalt typical brackish waters at pressures up to 450 psi. Any make of eight-inch nominal diameter spiral-wound element is easily accommodated; the appropriate interfacing hardware for the element specified is furnished with the vessel.

The CodeLine Model 80E45 is designed in accordance with the engineering standards of the Boiler and Pressure Vessel Code of the American Society of Mechanical Engineers (ASME Code). At small additional cost, vessels can be inspected during construction by an ASME Authorized inspector and ASME Code stamped.

The CodeLine Model 80E45 must be installed, operated and maintained in accordance with the listed precautions and good industrial practice to assure safe operation over a long service life.

The high performance reinforced plastic shell must be allowed to expand under pressure; undue restraint at support points or piping connections can cause leaks to develop in the shell. The end closure, incorporating close fitting, interlocking metal components, must be kept dry and free of corrosion; deterioration can lead to catastrophic mechanical failure of the head.

The end closures, incorporating close-fitting, interlocking metal components, must be kept dry and free of corrosion; deterioration can lead to catastrophic mechanical failure of the heads.

Pentair Water will assist the purchaser in determining the suitability of this standard vessel for their specific operating conditions. The final determination however, including evaluation of the standard material of construction for compatibility with the specific corrosive environment, shall be the responsibility of the purchaser.

Specifications are subject to change without notice.

PRECAUTIONS:

DO…read, understand and follow all instructions; failure to take every precaution will void warranty and may result in vessel failure
DO…mount the shell on horizontal members at span "S" using complaint vessel supports furnished; tighten hold down straps just snug
DO…provide overpressure protection for vessel set at not more than 105% of design pressure
DO…inspect end closures regularly; replace components that have deteriorated and correct causes of corrosion

DO NOT… make rigid piping connections to ports or clamp vessel in any way that resists growth of fiberglass shell under pressure; ΔDIA = 0.015 in. (0.4mm) and ΔL = 0.2 in. (5mm) for a length code –7 vessel
DO NOT… hang piping manifolds from ports or use vessel in any way to support other components; branch connection piping may be simply supported between the header and port; maximum weight of branch piping; feed/concentrate – 16 lbs (7.3 kg); permeate – 8 lbs (3.6 kg)
DO NOT… operate vessel at pressures and temperatures in excess of its rating
DO NOT… operate vessel without permeate ports internally connected with a complete set of elements and interconnecting hardware
DO NOT… operate vessel with permeate pressure in excess of 125 psi at 120°F (0.86 MPa @ 49°C)
DO NOT… overtighten the connection to the permeate port (hand-tighten plus one-quarter turn, check for leaks)
DO NOT… tolerate leaks or allow end closures to be routinely wetted in any way
DO NOT… pressurize vessel until double-checking to verify that the retaining ring is completely inside the groove
DO NOT… work on any component until first verifying that pressure is relieved from vessel
DO NOT… operate at pH levels below 3 or above 10

ORDERING:

Using the chart below, please check the features you require and fax them with your purchase order to our customer service department for expedited processing.
For optional materials and/or features not listed below, please consult factory for pricing and availability.

Please note that we require your membrane brand and model number when ordering. If this information is not initially available, you may provide it at a later date by checking the appropriate box below.

VESSEL LENGTH CODE – please check one

MODEL 80E45 ☐ -1 ☐ -2 ☐ -3 ☐ -4 ☐ -5 ☐ -6 ☐ -7

MEMBRANE BRAND AND MODEL – please check one and fill in information

☐ Please supply adapters for the following membrane brand and specific model
Brand_____Model_____

CERTIFICATION REQUIRED

❑ ASME Stamped and National Board Registered (please consult factory for pricing)
❑ CE Marked
❑ Standard, Certified by Pentair water.

EXTERIOR FINISH – please check one

☐ Standard – white high-gloss polyurethane coating.
☐ Option – optional colors are available for 50 or more vessels per order. Call factory for pricing details.

MATERIAL OPTIONS

❑ Standard – All materials as per drawing 99112 on the first page.
❑ Customer specified materials: -
(Please consult the factory, as these options will affect pricing and vessel lead-time.)

For complete information on proper use of this vessel please refer to the 80E series USER'S GUIDE Bulletin 523004.

PRESSURE VESSELS RO CODELINE 8"-600 PSI PV 80E60 END PORT

PV 80E60 CODELINE

MATERIALE DI COMPOSIZIONE:
- Vessel: _____Vetroresina
- Tappi: _____Lega di alluminio 6061-T6
- Anello di chiusura tappo:_____ 316 SST
- Basamento tappo: _____ Lega di alluminio 6061-T6
- Selle (incluse): _____ materiale termoplastico (nr. 2 per vessel fino al 3 elementi, dal 4 elementi fino al 6 elementi nr. 3 per vessel).
- Tiranti (inclusi):_____in AISI 304 e cuscini in PVC (nr. 2 per vessel fino al 3 elementi, dal 4 elementi fino al 6 elementi nr. 3 per vessel).

DATI TECNICI
- Pressione di progetto: _____ 41 bar a 49°C (600 psi a 120°F)
- Temperatura minima di esercizio: _____ -7°C (20°F)
- Pressione di collaudo:
• ASME 53 bar (780 psi)
• CE 62 bar (900 psi)
- Pressione di scoppio: _____ 248 bar (3600 psi)
- Uscita permeato: _____ 1" NPT femmina
- Uscita concentrato: _____ 1 1/2" in AISI 316 connessione per giunto victaulic (giunto victaulic non incluso)
- Colore Standard: _____Bianco
- Connettori per membrana (non inclusi):___ Tramite adapter (2 x vessel, vedi documentazione tecnica)
- Nr. di elementi disponibili: _____1-2-3-4-5-6-7

CERTIFICATI:
- Ispezione e marcatura ASME CODE (quotazione su richiesta)
- Marcatura CE (quotazione su richiesta)
- Direttiva 97/23/CE (PED)
- NSF/ANSI 61
- ISO 9001:2000

APPLICAZIONI:
- Osmosi inversa;
- Ultrafiltrazione.

ACCESSORI DA ORDINARE A PARTE:
- Adapter: nr. 2 x vessel (vedi documentazione tecnica).
- Giunti Victaulic 1 1/2" VIC0001

TRATTAMENTO DELLE ACQUE:
- Domestiche
- Industriali
- Municipali
- Reflue (conntattare l' Ufficio tecnico Hytek)
- di mare
- Farmaceutiche
- Alimentari

CODELINE PV 80E60

MATERIALS COMPOSITION:
- Shell material: _____Fiberglass
- Plugs: _____ 6061-T6 Hard anodized Alum. alloy
- Retaining ring _____ 316 SST
- Bearing ring _____ 6061-T6 Hard anodized Alum. alloyl
- Saddles (included): _____Engineering thermoplastic ((nr. 2 supports required up to 3 elements, 3 supports required for length 4 and over)
- Straps (included): _____AISI 304 and cushion in PVC (nr. 2 straps required up to 3 elements, 3 supports required for length 4 and over)

TECHNICAL SHEET:
- Design Pressure: _____ 41 bar a 49°C (600 psi at 120°F)
- Min. Operating temperature: _____ -7°C (20°F)
- Factory Test Pressure:
• ASME 40 bar (585 psi)
• CE 46 bar (675 psi)
- Burst Pressure: _____ 248 bar (3600 psi)
-Permeate Port: _____ 1" NPT female
- Concentrate Port: _____1 1/2" in AISI 316 connection for victaulic joint (victaulic joint not included)
- Standard color: _____ White
- Connection for membrane (not included): _____ By Adapter (2 x vessel, see technical documentation)
- Nr. elements available: _____1-2-3-4-5-6-7

CERTIFICATIONS:
- Inspection and ASME CODE stamped (quotation on request)
- CE mark stamped (quotation on request)
- 97/23/CE Directive (PED)
- NSF/ANSI 61
- ISO 9001:2000

APPLICATIONS:
- Reverse Osmose
- Ultrafiltration.

ACCESSORIES TO BE ORDERED SEPARATELY:
- Adapter: 2 x vessel, see technical documentation
- Victaulic Joints 1 1/2" VIC0001

WATER TREATMENTS
- Domestics
- Industrials
- Municipals
- Drains (contact Hytek Technical Office)
- Sea
- Farmaceutics
- Alimentary

www.hytekintl.com info@hytekintl.com

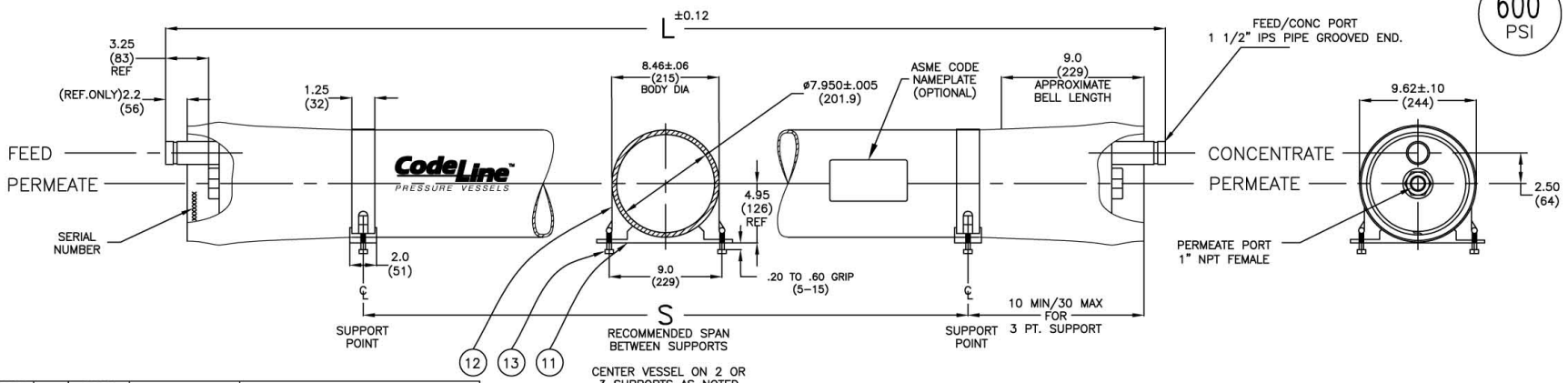

DWG REF	QTY	PART NUMBER	DESCRIPTION	MATERIAL
SHELL				
01	1	ORDER SECTION	SHELL	Filament Wound Epoxy/Glass composites - SS Head locking grooves integrally wound in place.
HEAD				
02	2	51052	Bearing Plate	6061-T6 Aluminium Alloy-Hard Anodized.
03	2	96003	Sealing Plate	Engineering Thermoplastic.
04	2	50567	Feed/Conc Port	316 Stainless Steel.
05	2	45090	Port Retainer Set	CF8M Cast SS, Two-piece set.
06	2	50569	Permeate Port	Engineering Thermoplastic.
07	2	45066	Port Nut	Engineering Thermoplastic.
08	2	96000	Head Seal	Ethylene Propylene - O Ring.(442)
09	4	45312	Port Seal	Ethylene Propylene - O Ring.(225)
HEAD INTERLOCK				
10	2	47336	Retaining Ring	316 Stainless Steel.
VESSEL SUPPORT				
11	*2	52169	Saddle	Engineering Thermoplastic.
12	*2	45042	Strap Assy.	304 Stainless Steel - PVC cushion
13	4	46265	Strap screw.	5/16-18 UNC, 18-8 Stainless Steel.
ELEMENT INTERFACE				
14	2	A/R	Adapter	Engineering Thermoplastic.
15	4	A/R	PWT Seal	Ethylene Propylene - O - Ring
16	2	52245	Adapter seal	Ethylene Propylene - O - Ring (124)
17	1	45069	Thrust Ring	Engineering Thermoplastic.

* 3 Each Furnished With Length Code 4, 5, 6 & 7.

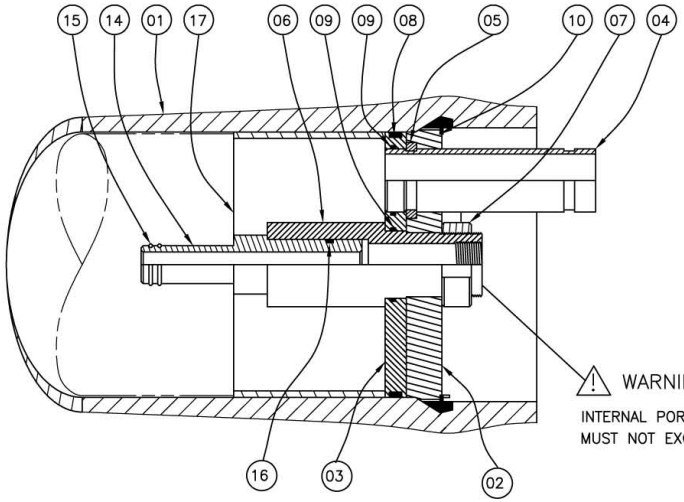

SECTION THROUGH END CLOSURE

ITEM 17 DOWNSTREAM ONLY

WARNING!

INTERNAL PORT PRESSURE MUST NOT EXCEED 125 PSI

NOTES
* SHELL EXTERIOR COATED WITH WHITE, HIGH GLOSS POLYURETHANE PAINT
*DIMENSIONS ARE IN INCHES (MM APPROX.)
*NOT TO BE USED FOR CONSTRUCTION UNLESS CERTIFIED
*GENERAL TOLERANCES APPLY, FOR DETAILS CONTACT FACTORY
*L.O.A REFERS TO OVERALL LENGTH OF THE VESSEL.
*EMPTY WEIGHT REFERS TO SHELL WEIGHT INCLUDING HEAD ASSEMBLIES WITHOUT MEMBRANES.

Shell Length Code	L L.O.A. IN (MM)	S Span IN (MM)	Empty Weight LB (KG)
1	63 (1600)	40 X 1 (1016)	50 (23)
2	103 (2616)	80 X 1 (2032)	70 (32)
3	143 (3632)	120 X 1 (3048)	90 (41)
4	183 (4648)	80 X 2 (2032)	110 (50)
5	223 (5664)	100 X 2 (2540)	130 (59)
6	263 (6680)	120 X 2 (3048)	150 (68)
7	303 (7696)	140 X 2 (3556)	170 (77)

CodeLine™ Pentair Water

ENGR IS	MODEL 80E60 MEMBRANE HOUSING				
QLTY HP					
DATE 16MAY02	SCALE	SHEET	SIZE	NUMBER	REV
ECN 646	NONE	1 OF2	B	99109	E

RATING:

DESIGN PRESSURE……..600 PSIG at 120°F (4.14 Mpa @ 49°C)
MIN. OPERATING TEMP……..……20°F (-7°C)
FACTORY TEST PRESSURE……..CE / ASME 900 / 780 PSIG (6.2Mpa) / (5.4 MPa)
BURST PRESSURE……..……3600 PSIG (24.8 MPa)

INTENDED USE:

The CodeLine Model 80E60 Fiberglass RO Pressure Vessel is designed for continuous, long term use as a housing for reverse osmosis membrane elements to desalt typical brackish waters at pressures up to 600 psi. Any make of eight-inch nominal diameter spiral-wound element is easily accommodated; the appropriate interfacing hardware for the element specified is furnished with the vessel.

The CodeLine Model 80E60 is designed in accordance with the engineering standards of the Boiler and Pressure Vessel Code of the American Society of Mechanical Engineers (ASME Code). At small additional cost, vessels can be inspected during construction by an ASME Authorized inspector and ASME Code stamped.

The CodeLine Model 80E60 must be installed operated and maintained in accordance with the listed precautions and good industrial practice to assure safe operation over a long service life.

The high performance reinforced plastic shell must be allowed to expand under pressure; undue restraint at support points or piping connections can cause leaks to develop in the shell. The end closure, incorporating close fitting, interlocking metal components, must be kept dry and free of corrosion; deterioration can lead to catastrophic mechanical failure of the head.

The end closures, incorporating close-fitting, interlocking metal components, must be kept dry and free of corrosion; deterioration can lead to catastrophic mechanical failure of the heads.

Pentair Water will assist the purchaser in determining the suitability of this standard vessel for their specific operating conditions. The final determination however, including evaluation of the standard material of construction for compatibility with the specific corrosive environment, shall be the responsibility of the purchaser.

Specifications are subject to change without notice.

PRECAUTIONS:

DO…read, understand and follow all instructions; failure to take every precaution will void warranty and may result in vessel failure
DO…mount the shell on horizontal members at span "S" using complaint vessel supports furnished; tighten hold down straps just snug
DO…provide overpressure protection for vessel set at not more than 105% of design pressure
DO…inspect end closures regularly; replace components that have deteriorated and correct causes of corrosion

DO NOT… make rigid piping connections to ports or clamp vessel in any way that resists growth of fiberglass shell under pressure; ΔDIA = 0.015 in. (0.4mm) and ΔL = 0.2 in. (5mm) for a length code –7vessel
DO NOT… hang piping manifolds from ports or use vessel in any way to support other components; branch connection piping may be simply supported between the header and port; maximum weight of branch piping; feed/concentrate – 16 lbs (7.3 kg); permeate – 8 lbs (3.6 kg)
DO NOT… operate vessel at pressures and temperatures in excess of its rating
DO NOT… operate vessel without permeate ports internally connected with a complete set of elements and interconnecting hardware
DO NOT… operate vessel with permeate pressure in excess of 125 psi at 120°F (0.86 MPa @ 49°C)
DO NOT… overtighten the connection to the permeate port (hand-tighten plus one-quarter turn, check for leaks)
DO NOT… tolerate leaks or allow end closures to be routinely wetted in any way
DO NOT… pressurize vessel until double-checking to verify that the retaining ring is completely inside the groove
DO NOT… work on any component until first verifying that pressure is relieved from vessel
DO NOT… operate at pH levels below 3 or above 10

ORDERING:

Using the chart below, please check the features you require and fax them with your purchase order to our customer service department for expedited processing.
For optional materials and/or features not listed below, please consult factory for pricing and availability.

Please note that we require your membrane brand and model number when ordering. If this information is not initially available, you may provide it at a later date by checking the appropriate box below.

VESSEL LENGTH CODE – please check one

MODEL 80E60 ☐ -1 ☐ -2 ☐ -3 ☐ -4 ☐ -5 ☐ -6 ☐ -7

MEMBRANE BRAND AND MODEL – please check one and fill in information

☐ Please supply adapters for the following membrane brand and specific model
Brand_____Model_____

CERTIFICATION REQUIRED

❑ ASME Stamped and National Board Registered (please consult factory for pricing)
❑ CE Marked
❑ Standard, Certified by Pentair water.

EXTERIOR FINISH – please check one

☐ Standard – white high-gloss polyurethane coating.
☐ Option – optional colors are available for 50 or more vessels per order. Call factory for pricing details.

MATERIAL OPTIONS

❑ Standard – All materials as per drawing 99109 on the first page.
❑ Customer specified materials: -
(Please consult the factory, as these options will affect pricing and vessel lead-time.)

For complete information on proper use of this vessel please refer to the 80E series USER'S GUIDE Bulletin 523004.

PRESSURE VESSELS RO CODELINE 8"-1000 PSI PV 80E100 END PORT

PV 80E100 CODELINE

MATERIALE DI COMPOSIZIONE:
- Vessel: _____Vetroresina
- Tappi: _____Lega di alluminio 6061-T6
- Anello di chiusura tappo:_____ 316 SST
- Basamento tappo: _____ Lega di alluminio 6061-T6
- Selle (incluse): _____ materiale termoplastico (nr. 2 per vessel fino al 3 elementi, dal 4 elementi fino al 6 elementi nr. 3 per vessel).
- Tiranti (inclusi):_____in AISI 304 e cuscini in PVC (nr. 2 per vessel fino al 3 elementi, dal 4 elementi fino al 6 elementi nr. 3 per vessel).

DATI TECNICI
- Pressione di progetto: _____ 69 bar a 49°C (1000 psi a 120°F)
- Temperatura minima di esercizio: _____ -7°C (20°F)
- Pressione di collaudo:
• ASME 90 bar (1300 psi)
• CE 103 bar (1500 psi)
- Pressione di scoppio: _____ 414 bar (6000 psi)
- Uscita permeato: _____ 1" NPT femmina
- Uscita concentrato: _____ 1 1/2" in AISI 316 connessione per giunto victaulic (giunto victaulic non incluso)
- Colore Standard: _____Bianco
- Connettori per membrana (non inclusi):___ Tramite adapter (2 x vessel, vedi documentazione tecnica)
- Nr. di elementi disponibili: _____1-2-3-4-5-6-7

CERTIFICATI:
- Ispezione e marcatura ASME CODE (quotazione su richiesta)
- Marcatura CE (quotazione su richiesta)
- Direttiva 97/23/CE (PED)
- NSF/ANSI 61
- ISO 9001:2000

APPLICAZIONI:
- Osmosi inversa;
- Ultrafiltrazione.

ACCESSORI DA ORDINARE A PARTE:
- Adapter: nr. 2 x vessel (vedi documentazione tecnica).
- Giunti Victaulic 1 1/2" VIC0001

TRATTAMENTO DELLE ACQUE:
- Domestiche
- Industriali
- Municipali
- Reflue (conntattare l' Ufficio tecnico Hytek)
- di mare
- Farmaceutiche
- Alimentari

CODELINE PV 80E100

MATERIALS COMPOSITION:
- Shell material: _____Fiberglass
- Plugs: _____ 6061-T6 Hard anodized Alum. alloy
- Retaining ring _____ 316 SST
- Bearing ring _____ 6061-T6 Hard anodized Alum. alloyl
- Saddles (included): _____Engineering thermoplastic ((nr. 2 supports required up to 3 elements, 3 supports required for length 4 and over)
- Straps (included): _____AISI 304 and cushion in PVC (nr. 2 straps required up to 3 elements, 3 supports required for length 4 and over)

TECHNICAL SHEET:
- Design Pressure: _____ 69 bar a 49°C (1000 psi at 120°F)
- Min. Operating temperature: _____ -7°C (20°F)
- Factory Test Pressure:
• ASME 90 bar (1300 psi)
• CE 103 bar (1500 psi)
- Burst Pressure: _____ 414 bar (6000 psi)
-Permeate Port: _____ 1" NPT female
- Concentrate Port: _____1 1/2" in AISI 316 connection for victaulic joint (victaulic joint not included)
- Standard color: _____ White
- Connection for membrane (not included): _____ By Adapter (2 x vessel, see technical documentation)
- Nr. elements available: _____1-2-3-4-5-6-7

CERTIFICATIONS:
- Inspection and ASME CODE stamped (quotation on request)
- CE mark stamped (quotation on request)
- 97/23/CE Directive (PED)
- NSF/ANSI 61
- ISO 9001:2000

APPLICATIONS:
- Reverse Osmose
- Ultrafiltration.

ACCESSORIES TO BE ORDERED SEPARATELY:
- Adapter: 2 x vessel, see technical documentation
- Victaulic Joints 1 1/2" VIC0001

WATER TREATMENTS
- Domestics
- Industrials
- Municipals
- Drains (contact Hytek Technical Office)
- Sea
- Farmaceutics
- Alimentary

www.hytekintl.com info@hytekintl.com

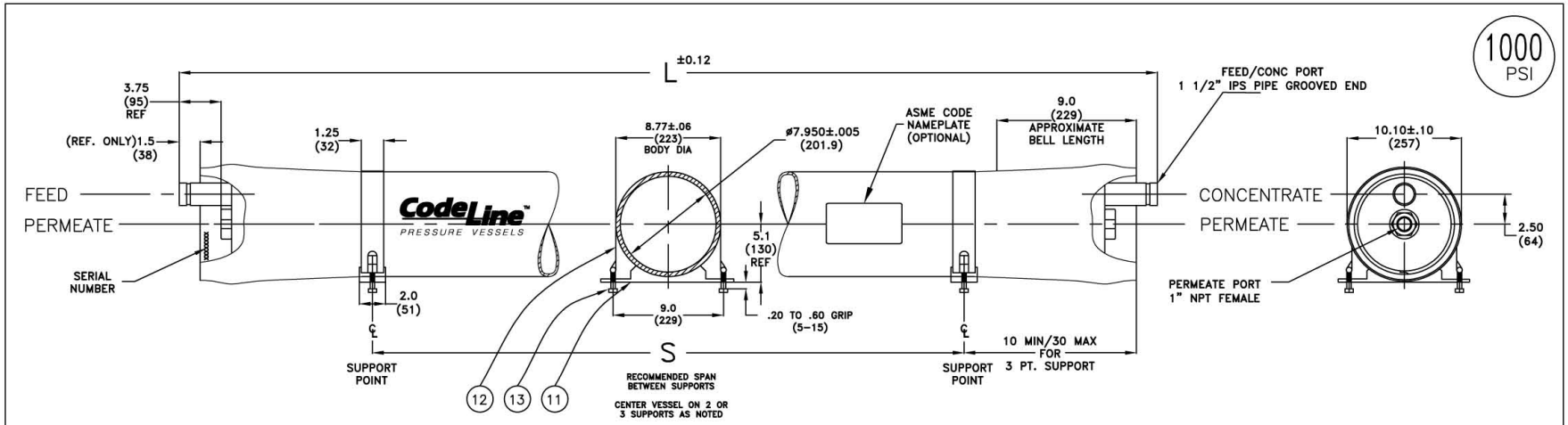

DWG REF	QTY	PART NUMBER	DESCRIPTION	MATERIAL
			SHELL	
01	1	ORDER SECTION	SHELL	Filament Wound Epoxy/Glass composites - SS Head locking grooves integrally wound in place.
			HEAD	
02	2	47317	Bearing Plate	6061-T6 Aluminium Alloy-Hard Anodized.
03	2	96003	Sealing Plate	Engineering Thermoplastic.
04	2	50556	Feed/Conc Port	Superaustenitic Stainless Steel, 6% Mo.
05	2	45090	Port Retainer Set	CF8M Cast SS, Two-piece set.
06	2	50558	Permeate Port	Engineering Thermoplastic.
07	2	45066	Port Nut	Engineering Thermoplastic.
08	2	96000	Head Seal	Ethylene Propylene - O Ring.(442)
09	4	45312	Port Seal	Ethylene Propylene - O Ring.(225)
			HEAD INTERLOCK	
10	2	47336	Retaining Ring	316 Stainless Steel.
			VESSEL SUPPORT	
11	*2	52169	Saddle	Engineering Thermoplastic.
12	*2	45042	Strap Assy.	304 Stainless Steel - PVC cushion
13	4	46265	Strap screw.	5/16-18 UNC, 18-8 Stainless Steel.
			ELEMENT INTERFACE	
14	2	A/R	Adapter	Engineering Thermoplastic.
15	4	A/R	PWT Seal	Ethylene Propylene - O - Ring
16	2	52245	Adapter seal	Ethylene Propylene - O - Ring (124)
17	1	45069	Thrust Ring	Engineering Thermoplastic.
* 3 Each Furnished With Length Code 4, 5, 6 & 7.				

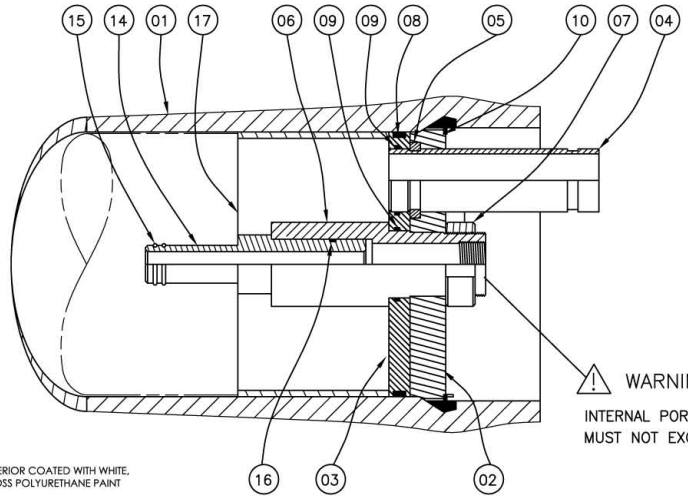

WARNING !
INTERNAL PORT PRESSURE MUST NOT EXCEED 125 PSI

SECTION THROUGH END CLOSURE

ITEM 17 DOWNSTREAM ONLY

NOTES
*SHELL EXTERIOR COATED WITH WHITE, HIGH GLOSS POLYURETHANE PAINT
*DIMENSIONS ARE IN INCHES (MM APPROX.)
*NOT TO BE USED FOR CONSTRUCTION UNLESS CERTIFIED
*GENERAL TOLERANCES APPLY, FOR DETAILS CONTACT FACTORY
*L.O.A REFERS TO OVERALL LENGTH OF THE VESSEL.
*EMPTY WEIGHT REFERS TO SHELL WEIGHT INCLUDING HEAD ASSEMBLIES WITHOUT MEMBRANES.

Shell Length Code	L L.O.A. IN (MM)	S Span IN (MM)	Empty Weight LB (KG)
1	65.125 (1654)	40 X 1 (1016)	75 (34)
2	105.125 (2670)	80 X 1 (2032)	105 (48)
3	145.125 (3686)	120 X 1 (3048)	135 (61)
4	185.125 (4702)	80 X 2 (2032)	165 (75)
5	225.125 (5718)	100 X 2 (2540)	195 (89)
6	265.125 (6734)	120 X 2 (3048)	226 (103)
7	305.125 (7750)	140 X 2 (3556)	256 (116)

CodeLine™ Pentair Water

ENGR IS	MODEL 80E100 MEMBRANE HOUSING				
QLTY HP					
DATE 10MAY02	SCALE	SHEET	SIZE	NUMBER	REV
ECN 697,646	NONE	1 OF 2	B	99108	D

RATING:

DESIGN PRESSURE……...1000 PSI at 120°F (6.89 Mpa @ 49°C)
MIN. OPERATING TEMP……..……20°F (-7°C)
FACTORY TEST PRESSURE…....CE / ASME
1500 / 1300 PSI
(10.3 Mpa) / (8.96 MPa)
BURST PRESSURE……..……6000 PSI (41.4 MPa)

INTENDED USE:

The CodeLine Model 80E100 Fiberglass RO Pressure Vessel is designed for continuous, long term use as a housing for reverse osmosis membrane elements to desalt typical sea waters at pressures up to 1000 psi. Any make of eight-inch nominal diameter spiral-wound element is easily accommodated; the appropriate interfacing hardware for the element specified is furnished with the vessel.

The CodeLine Model 80E100 is designed in accordance with the engineering standards of the Boiler and Pressure Vessel Code of the American Society of Mechanical Engineers (ASME Code). At small additional cost, vessels can be inspected during construction by an ASME Authorized inspector and ASME Code stamped.

The CodeLine Model 80E100 must be installed operated and maintained in accordance with the listed precautions and good industrial practice to assure safe operation over a long service life.

The high performance reinforced plastic shell must be allowed to expand under pressure; undue restraint at support points or piping connections can cause leaks to develop in the shell. The end closure, incorporating close fitting, interlocking metal components, must be kept dry and free of corrosion; deterioration can lead to catastrophic mechanical failure of the head.

The end closures, incorporating close-fitting, interlocking metal components, must be kept dry and free of corrosion; deterioration can lead to catastrophic mechanical failure of the heads.

Pentair Water will assist the purchaser in determining the suitability of this standard vessel for their specific operating conditions. The final determination however, including evaluation of the standard material of construction for compatibility with the specific corrosive environment, shall be the responsibility of the purchaser.

Specifications are subject to change without notice.

PRECAUTIONS:

DO…read, understand and follow all instructions; failure to take every precaution will void warranty and may result in vessel failure
DO…mount the shell on horizontal members at span "S" using complaint vessel supports furnished; tighten hold down straps just snug
DO…provide overpressure protection for vessel set at not more than 105% of design pressure
DO…inspect end closures regularly; replace components that have deteriorated and correct causes of corrosion

DO NOT… make rigid piping connections to ports or clamp vessel in any way that resists growth of fiberglass shell under pressure; ΔDIA = 0.015 in. (0.4mm) and ΔL = 0.2 in. (5mm) for a length code –7 vessel
DO NOT… hang piping manifolds from ports or use vessel in any way to support other components; branch connection piping may be simply supported between the header and port; maximum weight of branch piping; feed/concentrate – 16 lbs (7.3 kg); permeate – 8 lbs (3.6 kg)
DO NOT… operate vessel at pressures and temperatures in excess of its rating
DO NOT… operate vessel without permeate ports internally connected with a complete set of elements and interconnecting hardware
DO NOT… operate vessel with permeate pressure in excess of 125 psi at 120°F (0.86 MPa @ 49°C)
DO NOT… overtighten the connection to the permeate port (hand-tighten plus one-quarter turn, check for leaks)
DO NOT… tolerate leaks or allow end closures to be routinely wetted in any way
DO NOT… pressurize vessel until double-checking to verify that the retaining ring is completely inside the groove
DO NOT… work on any component until first verifying that pressure is relieved from vessel
DO NOT… operate at pH levels below 3 or above 10

ORDERING:

Using the chart below, please check the features you require and fax them with your purchase order to our customer service department for expedited processing.
For optional materials and/or features not listed below, please consult factory for pricing and availability.

Please note that we require your membrane brand and model number when ordering. If this information is not initially available, you may provide it at a later date by checking the appropriate box below.

VESSEL LENGTH CODE – please check one

MODEL 80E100 ☐ -1 ☐ -2 ☐ -3 ☐ -4 ☐ -5 ☐ -6 ☐ -7

MEMBRANE BRAND AND MODEL – please check one and fill in information

☐ Please supply adapters for the following membrane brand and specific model
Brand_____Model_____

CERTIFICATION REQUIRED

- ❑ ASME Stamped and National Board Registered (please consult factory for pricing)
- ❑ CE Marked
- ❑ Standard, Certified by Pentair water.

EXTERIOR FINISH – please check one

- ☐ Standard – white high-gloss polyurethane coating.
- ☐ Option – optional colors are available for 50 or more vessels per order.

Call factory for pricing details.

MATERIAL OPTIONS

- ❑ Standard – All materials as per drawing 99108 on the first page.
- ❑ Customer specified materials: -
(Please consult the factory, as these options will affect pricing and vessel lead-time.)

For complete information on proper use of this vessel please refer to the 80E series USER'S GUIDE Bulletin 523004.

PRESSURE VESSELS RO CODELINE 8"-1200 PSI PV 80E120 END PORT

PV 80E120 CODELINE

MATERIALE DI COMPOSIZIONE:
- Vessel: _____Vetroresina
- Tappi: _____Lega di alluminio 6061-T6
- Anello di chiusura tappo:_____ 316 SST
- Basamento tappo: _____ Lega di alluminio 6061-T6
- Selle (incluse): _____ materiale termoplastico (nr. 2 per vessel fino al 3 elementi, dal 4 elementi fino al 6 elementi nr. 3 per vessel).
- Tiranti (inclusi):_____in AISI 304 e cuscini in PVC (nr. 2 per vessel fino al 3 elementi, dal 4 elementi fino al 6 elementi nr. 3 per vessel).

DATI TECNICI
- Pressione di progetto: _____ 83 bar a 49°C (1200 psi a 120°F)
- Temperatura minima di esercizio: _____ -7°C (20°F)
- Pressione di collaudo:
• ASME 107 bar (1560 psi)
• CE 124 bar (1800 psi)
- Pressione di scoppio: _____ 497 bar (7200 psi)
- Uscita permeato: _____ 1" NPT femmina
- Uscita concentrato: _____ 1 1/2" in AISI 316 connessione per giunto victaulic (giunto victaulic non incluso)
- Colore Standard: _____Bianco
- Connettori per membrana (non inclusi):___ Tramite adapter (2 x vessel, vedi documentazione tecnica)
- Nr. di elementi disponibili: _____1-2-3-4-5-6-7

CERTIFICATI:
- Ispezione e marcatura ASME CODE (quotazione su richiesta)
- Marcatura CE (quotazione su richiesta)
- Direttiva 97/23/CE (PED)
- NSF/ANSI 61
- ISO 9001:2000

APPLICAZIONI:
- Osmosi inversa;
- Ultrafiltrazione.

ACCESSORI DA ORDINARE A PARTE:
- Adapter: nr. 2 x vessel (vedi documentazione tecnica).
- Giunti Victaulic 1 1/2" VIC0001

TRATTAMENTO DELLE ACQUE:
- Domestiche
- Industriali
- Municipali
- Reflue (conntattare l' Ufficio tecnico Hytek)
- di mare
- Farmaceutiche
- Alimentari

CODELINE PV 80E120

MATERIALS COMPOSITION:
- Shell material: _____Fiberglass
- Plugs: _____ 6061-T6 Hard anodized Alum. alloy
- Retaining ring _____ 316 SST
- Bearing ring _____ 6061-T6 Hard anodized Alum. alloyl
- Saddles (included): _____Engineering thermoplastic ((nr. 2 supports required up to 3 elements, 3 supports required for length 4 and over)
- Straps (included): _____AISI 304 and cushion in PVC (nr. 2 straps required up to 3 elements, 3 supports required for length 4 and over)

TECHNICAL SHEET:
- Design Pressure: _____ 83 bar a 49°C (1200 psi at 120°F)
- Min. Operating temperature: _____ -7°C (20°F)
- Factory Test Pressure:
• ASME 90 bar (1300 psi)
• CE 103 bar (1500 psi)
- Burst Pressure: _____ 497 bar (7200 psi)
-Permeate Port: _____ 1" NPT female
- Concentrate Port: _____1 1/2" in AISI 316 connection for victaulic joint (victaulic joint not included)
- Standard color: _____ White
- Connection for membrane (not included): _____ By Adapter (2 x vessel, see technical documentation)
- Nr. elements available: _____1-2-3-4-5-6-7

CERTIFICATIONS:
- Inspection and ASME CODE stamped (quotation on request)
- CE mark stamped (quotation on request)
- 97/23/CE Directive (PED)
- NSF/ANSI 61
- ISO 9001:2000

APPLICATIONS:
- Reverse Osmose
- Ultrafiltration.

ACCESSORIES TO BE ORDERED SEPARATELY:
- Adapter: 2 x vessel, see technical documentation
- Victaulic Joints 1 1/2" VIC0001

WATER TREATMENTS
- Domestics
- Industrials
- Municipals
- Drains (contact Hytek Technical Office)
- Sea
- Farmaceutics
- Alimentary

www.hytekintl.com info@hytekintl.com

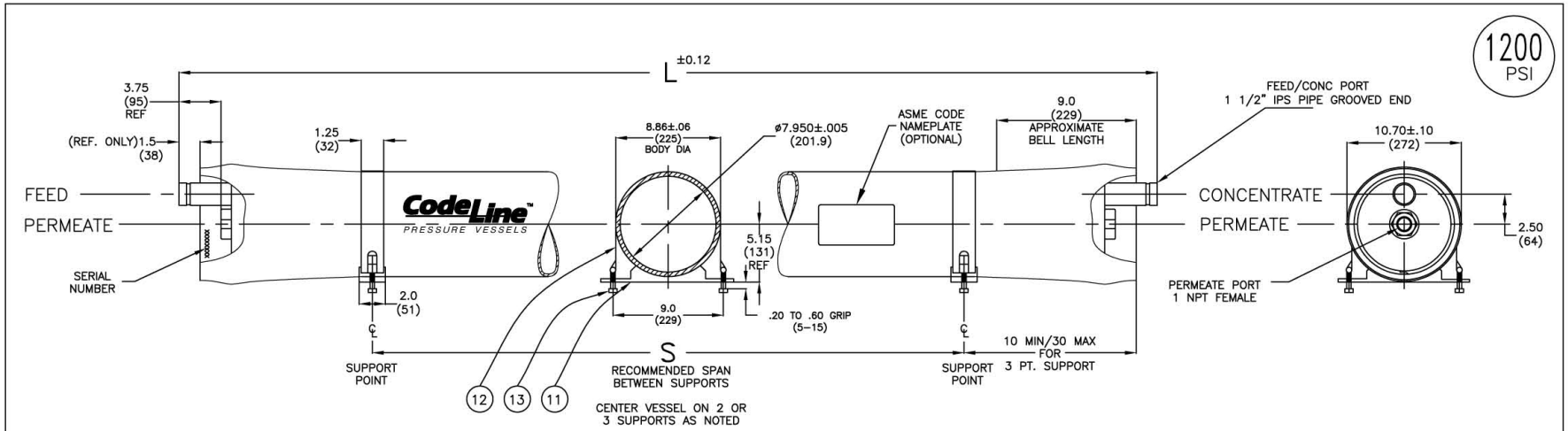

DWG REF	QTY	PART NUMBER	DESCRIPTION	MATERIAL
			SHELL	
01	1	ORDER SECTION	SHELL	Filament Wound Epoxy/Glass composites - SS Head locking grooves integrally wound in place.
			HEAD	
02	2	47293	Bearing Plate	6061-T6 Aluminium Alloy-Hard Anodized.
03	2	96003	Sealing Plate	Engineering Thermoplastic.
04	2	50556	Feed/Conc Port	Superaustenitic Stainless Steel, 6% Mo.
05	2	45090	Port Retainer Set	CF8M Cast SS, Two-piece set.
06	2	50558	Permeate Port	Engineering Thermoplastic.
07	2	45066	Port Nut	Engineering Thermoplastic.
08	2	96000	Head Seal	Ethylene Propylene - O Ring.(442)
09	4	45312	Port Seal	Ethylene Propylene - O Ring.(225)
			HEAD INTERLOCK	
10	2	47336	Retaining Ring	316 Stainless Steel.
			VESSEL SUPPORT	
11	*2	52169	Saddle	Engineering Thermoplastic.
12	*2	45042	Strap Assy.	304 Stainless Steel - PVC cushion
13	4	46265	Strap screw.	5/16-18 UNC, 18-8 Stainless Steel.
			ELEMENT INTERFACE	
14	2	A/R	Adapter	Engineering Thermoplastic.
15	4	A/R	PWT Seal	Ethylene Propylene - O - Ring
16	2	52245	Adapter seal	Ethylene Propylene - O - Ring (124)
17	1	45069	Thrust Ring	Engineering Thermoplastic.

* 3 Each Furnished With Length Code 4, 5, 6 & 7.

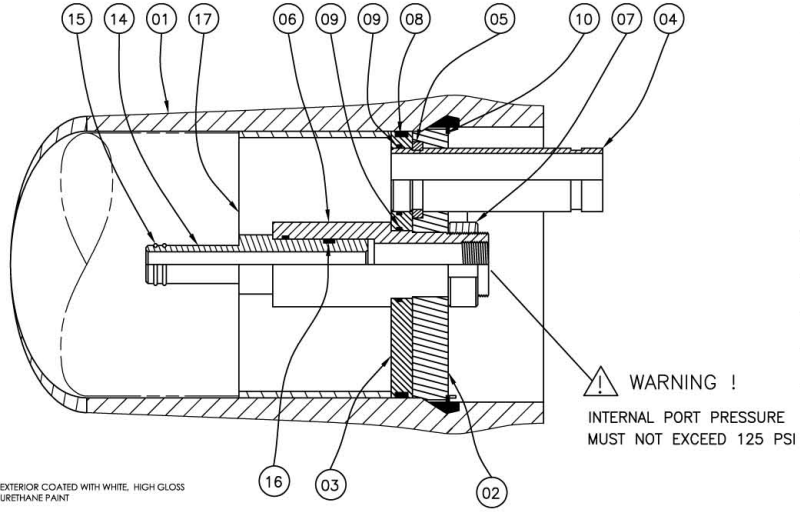

SECTION THROUGH END CLOSURE

ITEM 17 DOWNSTREAM ONLY

NOTES
*SHELL EXTERIOR COATED WITH WHITE, HIGH GLOSS POLYURETHANE PAINT
*DIMENSIONS ARE IN INCHES (MM APPROX.)
*NOT TO BE USED FOR CONSTRUCTION UNLESS CERTIFIED
*GENERAL TOLERANCES APPLY, FOR DETAILS CONTACT FACTORY
*L.O.A REFERS TO OVERALL LENGTH OF THE VESSEL.
*EMPTY WEIGHT REFERS TO SHELL WEIGHT INCLUDING HEAD ASSEMBLIES WITHOUT MEMBRANES.

Shell Length Code	L L.O.A. IN (MM)	S Span IN (MM)	Empty Weight LB (KG)
1	65.125 (1651)	40 X 1 (1016)	92 (42)
2	105.125 (2670)	80 X 1 (2032)	132 (60)
3	145.125 (3686)	120 X 1 (3048)	172 (78)
4	185.125 (4702)	80 X 2 (2032)	212 (96)
5	225.125 (5718)	100 X 2 (2540)	252 (114)
6	265.125 (6734)	120 X 2 (3048)	292 (132)
7	305.125 (7750)	140 X 2 (3556)	331 (150)

CodeLine™ Pentair Water

ENGR IS	MODEL 80E120 MEMBRANE HOUSING				
QLTY HP					
DATE 16MAY02	SCALE	SHEET	SIZE	NUMBER	REV
ECN 678, 646	NONE	1 OF 2	B	99110	F

RATING:

DESIGN PRESSURE……...1200 PSI at 120°F (8.27 Mpa @ 49°C)
MIN.OPERATING TEMP……..……..20°F (-7°C)
FACTORY TEST PRESSURE……CE / ASME 1800 / 1560 PSI (12.4Mpa) / (10.8 MPa)
BURST PRESSURE……..……7200 PSI (49.6 MPa)

INTENDED USE:

The CodeLine Model 80E120 Fiberglass RO Pressure Vessel is designed for continuous, long term use as a housing for reverse osmosis membrane elements to desalt typical sea waters at pressures up to 1200 psi. Any make of eight-inch nominal diameter spiral-wound element is easily accommodated; the appropriate interfacing hardware for the element specified is furnished with the vessel.

The CodeLine Model 80E120 is designed in accordance with the engineering standards of the Boiler and Pressure Vessel Code of the American Society of Mechanical Engineers (ASME Code). At small additional cost, vessels can be inspected during construction by an ASME Authorized inspector and ASME Code stamped.

The CodeLine Model 80E120 must be installed, operated and maintained in accordance with the listed precautions and good industrial practice to assure safe operation over a long service life.

The high performance reinforced plastic shell must be allowed to expand under pressure; undue restraint at support points or piping connections can cause leaks to develop in the shell. The end closure, incorporating close fitting, interlocking metal components, must be kept dry and free of corrosion; deterioration can lead to catastrophic mechanical failure of the head.

The end closures, incorporating close-fitting, interlocking metal components, must be kept dry and free of corrosion; deterioration can lead to catastrophic mechanical failure of the heads.

Pentair Water will assist the purchaser in determining the suitability of this standard vessel for their specific operating conditions. The final determination however, including evaluation of the standard material of construction for compatibility with the specific corrosive environment, shall be the responsibility of the purchaser.

Specifications are subject to change without notice.

PRECAUTIONS:

DO…read, understand and follow all instructions; failure to take every precaution will void warranty and may result in vessel failure
DO…mount the shell on horizontal members at span "S" using complaint vessel supports furnished; tighten hold down straps just snug
DO…provide overpressure protection for vessel set at not more than 105% of design pressure
DO…inspect end closures regularly; replace components that have deteriorated and correct causes of corrosion

DO NOT… make rigid piping connections to ports or clamp vessel in any way that resists growth of fiberglass shell under pressure; ΔDIA = 0.015 in. (0.4mm) and ΔL = 0.2 in. (5mm) for a length code –7 vessel
DO NOT… hang piping manifolds from ports or use vessel in any way to support other components; branch connection piping may be simply supported between the header and port; maximum weight of branch piping; feed/concentrate – 16 lbs (7.3 kg); permeate – 8 lbs (3.6 kg)
DO NOT… operate vessel at pressures and temperatures in excess of its rating
DO NOT… operate vessel without permeate ports internally connected with a complete set of elements and interconnecting hardware
DO NOT… operate vessel with permeate pressure in excess of 125 psi at 120°F (0.86 MPa @ 49°C)
DO NOT… overtighten the connection to the permeate port (hand-tighten plus one-quarter turn, check for leaks)
DO NOT… tolerate leaks or allow end closures to be routinely wetted in any way
DO NOT… pressurize vessel until double-checking to verify that the retaining ring is completely inside the groove
DO NOT… work on any component until first verifying that pressure is relieved from vessel
DO NOT… operate at pH levels below 3 or above 10

ORDERING:

Using the chart below, please check the features you require and fax them with your purchase order to our customer service department for expedited processing.
For optional materials and/or features not listed below, please consult factory for pricing and availability.

Please note that we require your membrane brand and model number when ordering. If this information is not initially available, you may provide it at a later date by checking the appropriate box below.

VESSEL LENGTH CODE – please check one

MODEL 80E120 ☐ -1 ☐ -2 ☐ -3 ☐ -4 ☐ -5 ☐ -6 ☐ -7

MEMBRANE BRAND AND MODEL – please check one and fill in information

☐ Please supply adapters for the following membrane brand and specific model
Brand_____Model_____

CERTIFICATION REQUIRED

❑ ASME Stamped and National Board Registered (please consult factory for pricing)
❑ CE Marked
❑ Standard, Certified by Pentair water.

EXTERIOR FINISH – please check one

☐ Standard – white high-gloss polyurethane coating.
☐ Option – optional colors are available for 50 or more vessels per order. Call factory for pricing details.

MATERIAL OPTIONS

❑ Standard – All materials as per drawing 99110 on the first page.
❑ Customer specified materials: -
(Please consult the factory, as these options will affect pricing and vessel lead-time.)

For complete information on proper use of this vessel please refer to the 80E series USER'S GUIDE Bulletin 523004.

ADATTATORI PER PV 80E30-80E45-80E60-80E100-80E120 CODELINE / ADAPTERS CODELINE FOR 80E30-80E45-80E60-80E100-80E120

MARCA MEMBRANA MEMBRANA MAKE	MODELLO/MODEL	ADAPTER < 600 PSI	ADAPTER < 600 PSI	TIPO DI ADAPTER ADAPTER TYPE
GE - Osmonics / DESAL				
	SEASOFT 8040 HF	CA50161	CA50165	Male/Maschio
	SEASOFT 8040 HR	CA50161	CA50165	Male/Maschio
	DURATHERM STD RO 8040	CA50161	CA50165	Male/Maschio
	DURATHERM HWS RO 8040	CA50161	CA50165	Male/Maschio
	DURASLICK RO 8040 HS	CA50161	CA50165	Male/Maschio
	DURASLICK RO 8040	CA50161	CA50165	Male/Maschio
	DURASLICK NF 8040 HS	CA50161	CA50165	Male/Maschio
	DURASLICK NF 8040 HS	CA50161	CA50165	Male/Maschio
	CK8040N	CA50161	CA50165	Male/Maschio
	CK8040F	CA50161	CA50165	Male/Maschio
	CG8040F	CA50161	CA50165	Male/Maschio
	CE8040N	CA50161	CA50165	Male/Maschio
	CE8040F	CA50161	CA50165	Male/Maschio
	CD8040F	CA50161	CA50165	Male/Maschio
	AK8040N-400	CA50161	CA50165	Male/Maschio
	AK8040N	CA50161	CA50165	Male/Maschio
	AK8040F-400-CERT	CA50161	CA50165	Male/Maschio
	AK8040F-400	CA50161	CA50165	Male/Maschio
	AK8040F	CA50161	CA50165	Male/Maschio
	AK8040C	CA50161	CA50165	Male/Maschio
	AG8040N-400	CA50161	CA50165	Male/Maschio
	AG8040N	CA50161	CA50165	Male/Maschio
	AG8040F-CERT	CA50161	CA50165	Male/Maschio
	AG8040F-400-CERT	CA50161	CA50165	Male/Maschio
	AG8040F-400	CA50161	CA50165	Male/Maschio
	AG8040F	CA50161	CA50165	Male/Maschio
	AG8040C	CA50161	CA50165	Male/Maschio
	AD8040F	CA50161	CA50165	Male/Maschio
	AD8040	CA50165	-	Male/Maschio
	AE8040	CA50165	-	Male/Maschio
	AG8040	CA50161	-	Male/Maschio
	AK8040	CA50161	-	Male/Maschio
	DK8040	CA51395	-	Male/Maschio
	DL8040	CA51395	-	Male/Maschio
	EW8040	CA51395	-	Male/Maschio
	GE8040	CA51395	-	Male/Maschio
	GH8040	CA51395	-	Male/Maschio
	GK8040	CA51395	-	Male/Maschio
	GM8040	CA51395	-	Male/Maschio
	GN8040	CA51395	-	Male/Maschio
	HL8040	CA50161	-	Male/Maschio
	JX8040	CA51395	-	Male/Maschio
	PW8040	CA51395	-	Male/Maschio
	SC8040	CA51395	-	Male/Maschio
	SE8040	CA51395	-	Male/Maschio
	SG8040	CA51395	-	Male/Maschio
	811	CA51405	CA51404	Male/Maschio
	813	CA51405	CA51404	Male/Maschio
	815HR	CA51405	CA51404	Male/Maschio
	817	CA51405	CA51404	Male/Maschio
	823	CA50161	-	Male/Maschio
	825	CA50165	-	Male/Maschio

www.hytekintl.com info@hytekintl.com

MARCA MEMBRANA MEMBRANA MAKE	MODELLO/MODEL	ADAPTER < 600 PSI	ADAPTER < 600 PSI	TIPO DI ADAPTER ADAPTER TYPE
Filmtec (DOW)				
	SW30HR-8040	CA50161	CA50165	Male/Maschio
	SR90-400	CA50161	CA50165	Male/Maschio
	SW30-380	CA50161	CA50165	Male/Maschio
	RO-390-FF	CA50161	CA50165	Male/Maschio
	HSRO-390-FF	CA51405	CA51404	Male/Maschio
	SG30-400	CA50161	CA50165	Male/Maschio
	SG30LE-430	CA50168	CA50167	Male/Maschio
	NF200-400	CA50168	CA50167	Male/Maschio
	NF270-400	CA50168	CA50167	Male/Maschio
	NF90-400	CA50168	CA50167	Male/Maschio
	NF-400	CA51405	CA51404	Male/Maschio
	SW30HR LE-400	CA50161	CA50165	Male/Maschio
	SW30HR-320	CA50161	CA50165	Male/Maschio
	SW30HR-380	CA50161	CA50165	Male/Maschio
	SW30HR LE-400i	CA94332 (Upstream)	CA94333 (Upstream)	Male/Maschio
		CA50161 (Downstream)	CA50165 (Downstream)	Male/Maschio
	SW30XLE-400i	CA94332 (Upstream)	CA94333 (Upstream)	Male/Maschio
		CA50161 (Downstream)	CA50165 (Downstream)	Male/Maschio
	BW30-365-FR	CA50161	CA50165	Male/Maschio
	BW30-400-FR	CA50161	CA50165	Male/Maschio
	BW30LE-440	CA50168	CA50167	Male/Maschio
	LE-400	CA50161	CA50165	Male/Maschio
	LE-400i	CA94332 (Upstream)	CA94333 (Upstream)	Male/Maschio
		CA50161 (Downstream)	CA50165 (Downstream)	Male/Maschio
	XLE-440	CA50168	CA50167	Male/Maschio
	BW30-365	CA50161	CA50165	Male/Maschio
	BW30-400	CA50161	CA50165	Male/Maschio
	BW30-400/34i	CA94332 (Upstream)	CA94333 (Upstream)	Male/Maschio
		CA50161 (Downstream)	CA50165 (Downstream)	Male/Maschio
	BW30-440i	CA94332 (Upstream)	CA94333 (Upstream)	Male/Maschio
		CA50161 (Downstream)	CA50165 (Downstream)	Male/Maschio
	BWLE-400	CA50161	-	Male/Maschio
	BW30LE-440i	CA94332 (Upstream)	CA94333 (Upstream)	Male/Maschio
		CA50161 (Downstream)	CA50165 (Downstream)	Male/Maschio
	SG30HR-390FF	CA50161	-	Male/Maschio

www.hytekintl.com info@hytekintl.com

MARCA MEMBRANA MEMBRANA MAKE	MODELLO/MODEL	ADAPTER < 600 PSI	ADAPTER < 600 PSI	TIPO DI ADAPTER ADAPTER TYPE
KOCH (Fluid Systems)				
	8323 UF	CA50168	CA50167	Male/Maschio
	TFC-8822FR-365	CA50161	CA50165	Male/Maschio
	TFC-8822FR-400	CA50161	CA50165	Male/Maschio
	TFC-8832FR-575 Magnum	CA50161	CA50165	Male/Maschio
	8133 UF Magnum	CA50168	CA50167	Male/Maschio
	8723 SR2-280 N2	CA50168	CA50167	Male/Maschio
	8733 SR2-420 N2	CA50168	CA50167	Male/Maschio
	8723 SR2-400	CA50168	CA50167	Male/Maschio
	8733 SR2-575 Magnum	CA50168	CA50167	Male/Maschio
	8822HR	CA50161	CA50165	Male/Maschio
	8232HR- Magnum	CA50161	CA50165	Male/Maschio
	8923 S-400	CA50168	CA50167	Male/Maschio
	8933 S-575 Magnum	CA50168	CA50167	Male/Maschio
	8823 ULP-400	CA50168	CA50167	Male/Maschio
	8833 ULP Magnum	CA50168	CA50167	Male/Maschio
	8822 HR-365 Premium	CA50161	CA50165	Male/Maschio
	8822 HR-400 Premium	CA50161	CA50165	Male/Maschio
	8822HR-365	CA50161	CA50165	Male/Maschio
	8822 HR-400	CA50161	CA50165	Male/Maschio
	8832 HR-575 Magnum	CA50161	CA50165	Male/Maschio
	8822 XR-365	CA50161	CA50165	Male/Maschio
	8822 XR-400	CA50161	CA50165	Male/Maschio
	8832 XR-575 Magnum	CA50161	CA50165	Male/Maschio
	2822 HF-370	CA50161	CA50165	Male/Maschio
	2832 HF-560 Magnum	CA50161	CA50165	Male/Maschio
	2822 SS-300 Premium	CA50161	CA50165	Male/Maschio
	2822 SS-300	CA50161	CA50165	Male/Maschio
	2822 SS-360	CA50161	CA50165	Male/Maschio
	2832 SS-465 Magnum	CA50161	CA50165	Male/Maschio
	2832 SS-540 Magnum	CA50161	CA50165	Male/Maschio
	PES8323UF	CA50168	-	Male/Maschio
	ROGA8133UF	CA50168	-	Male/Maschio
	ROGA8221HR	CA51414	-	Male/Maschio
	ROGA8231HR	CA51414	-	Male/Maschio
	ROGA8233LP	CA50168	-	Male/Maschio
	TFC2822	CA50165	-	Male/Maschio
	TFC2832	CA50165	-	Male/Maschio
	TFC8723SR2	CA50168	-	Male/Maschio
	TFC8733SR2	CA50168	-	Male/Maschio
	TFC8821	CA51414	-	Male/Maschio
	TFC8822	CA50161	-	Male/Maschio
	TFC8823ULP	CA50168	-	Male/Maschio
	TFC8831	CA51414	-	Male/Maschio
	TFC8832	CA50161	-	Male/Maschio
	TFC8833ULP	CA50168	-	Male/Maschio
	TFC8921S	CA51414	-	Male/Maschio
	TFC8923S	CA50168	-	Male/Maschio
	TFC8931S	CA51414	-	Male/Maschio
	TFC8933S	CA50168	-	Male/Maschio

www.hytekintl.com info@hytekintl.com

MARCA MEMBRANA MEMBRANA MAKE	MODELLO/MODEL	ADAPTER < 600 PSI	ADAPTER < 600 PSI	TIPO DI ADAPTER ADAPTER TYPE
Hydranautics				
	ESNA1-LF2	CA50161	CA50165	Male/Maschio
	LFC3-LD	CA50161	CA50165	Male/Maschio
	LFC3	CA50161	CA50165	Male/Maschio
	SWC5	CA50161	CA50165	Male/Maschio
	SWC4+	CA50161	CA50165	Male/Maschio
	SWC3+	CA50161	CA50165	Male/Maschio
	SWC2	CA50168	CA50167	Male/Maschio
	SWC1	CA50168	CA50167	Male/Maschio
	ESPA3	CA50161	CA50165	Male/Maschio
	ESPA4	CA50161	CA50165	Male/Maschio
	ESPAB	CA50161	CA50165	Male/Maschio
	ESPA2+	CA50161	CA50165	Male/Maschio
	ESPA2	CA50161	CA50165	Male/Maschio
	ESPA1	CA50161	CA50165	Male/Maschio
	CPA4	CA50161	CA50165	Male/Maschio
	CPA3	CA50161	CA50165	Male/Maschio
	CPA2	CA50161	CA50165	Male/Maschio
	ESNA1	CA50161	-	Male/Maschio
	ESNA1-LF	CA50161	-	Male/Maschio
	ESNA2	CA50161	-	Male/Maschio
	LFC1	CA50161	-	Male/Maschio
	LFC2	CA50161	-	Male/Maschio
	SANRO CPA3	CA50161	-	Male/Maschio
	ANRO CPA4	CA50161	-	Male/Maschio
	SANRO ESPA2	CA50161	-	Male/Maschio
	SANRO LFC3	CA50161	-	Male/Maschio
	SANRO-HS	CA50161	-	Male/Maschio
	SWC	CA50165	-	Male/Maschio
	ES 15-U8	CA51424	-	Female/Femmina
	ES 15-D8	CA51424	-	Female/Femmina
	ES 20-D8	CA51424	-	Female/Femmina
	ES 20-D8+	CA50161	-	Male/Maschio
Saehan - CSM				
	UE8040-PF	CA50161	CA50165	Male/Maschio
	NE8040-70	CA50161	CA50165	Male/Maschio
	NE8040-90	CA50161	CA50165	Male/Maschio
	RE8040-HUE	CA50161	CA50165	Male/Maschio
	RE8040-UE	CA50161	CA50165	Male/Maschio
	RE8040-SH	CA50161	CA50165	Male/Maschio
	RE8040-SN	CA50161	CA50165	Male/Maschio
	RE8040-SR	CA50161	CA50165	Male/Maschio
	RE8040-FL	CA50161	CA50165	Male/Maschio
	RE8040-FN	CA50161	CA50165	Male/Maschio
	RE8040-FE	CA50161	CA50165	Male/Maschio
	RE8040-BLF	CA50161	CA50165	Male/Maschio
	RE8040-BLR	CA50161	CA50165	Male/Maschio
	RE8040-BL(N)	CA50161	CA50165	Male/Maschio
	RE8040-BL	CA50161	CA50165	Male/Maschio
	RE8040-BN	CA50161	CA50165	Male/Maschio
	RE8040-BE	CA50161	CA50165	Male/Maschio
	E8040-BF	CA50161	-	Male/Maschio
	RE8040-HFSR	CA50161	-	Male/Maschio

www.hytekintl.com info@hytekintl.com

MARCA MEMBRANA MEMBRANA MAKE	MODELLO/MODEL	ADAPTER < 600 PSI	ADAPTER < 600 PSI	TIPO DI ADAPTER ADAPTER TYPE
Toray (Romembra)				
	SC-6201X	CA51424	CA51424	Female/Femmina
	SC-4201	CA51424	CA51424	Female/Femmina
	SC-2201	CA51424	CA51424	Female/Femmina
	SC-620F	CA51424	CA51424	Female/Femmina
	SUL-G20P	CA51424	CA51424	Female/Femmina
	SUL-720P	CA51424	CA51424	Female/Femmina
	SU-820L	CA51424	CA51424	Female/Femmina
	SU-820FA	CA51424	CA51424	Female/Femmina
	SU-820	CA51424	CA51424	Female/Femmina
	SUL-G20	CA51424	CA51424	Female/Femmina
	SU-720R	CA51424	CA51424	Female/Femmina
	SU-720LF	CA51424	CA51424	Female/Femmina
	SU-720L	CA51424	CA51424	Female/Femmina
	SU-720F	CA51424	CA51424	Female/Femmina
	SU-720	CA51424	CA51424	Female/Femmina
	TM820H-400	CA50161	CA50165	Male/Maschio
	TM820H-370	CA50161	CA50165	Male/Maschio
	TM820L-370	CA50161	CA50165	Male/Maschio
	TM820L-400	CA50161	CA50165	Male/Maschio
	TM820-370	CA50161	CA50165	Male/Maschio
	TM820-400	CA50161	CA50165	Male/Maschio
	TML20-370	CA50161	CA50165	Male/Maschio
	TML20-400	CA50161	CA50165	Male/Maschio
	TMG20-400	CA50168	CA50167	Male/Maschio
	TMG20-430	CA50168	CA50167	Male/Maschio
	TM720-370	CA50161	CA50165	Male/Maschio
	TM720-400	CA50161	CA50165	Male/Maschio
	TM720-430	CA50161	CA50165	Male/Maschio
	SU-220	CA51424	-	Female/Femmina
	SU-620	CA51424	-	Female/Femmina
	SU-820	CA51424	-	Female/Femmina
	TM-720	CA50161	-	Male/Maschio
	TM-820	CA50165	-	Male/Maschio
	TMG-20	CA50168	-	Male/Maschio
Trisep				
	8040-X201-TZA	CA50168	CA50167	Male/Maschio
	8040-TS80-TSA	CA50168	CA50167	Male/Maschio
	8040-XN45-TSA	CA50168	CA50167	Male/Maschio
	8040-ACM5-UWA	CA50168	CA50167	Male/Maschio
	8040-ACM4-UWA	CA50168	CA50167	Male/Maschio
	8040-ACM4-TSFA	CA50161	CA50165	Male/Maschio
	8040-ACM4-TSA	CA50168	CA50167	Male/Maschio
	8040-ACM3-TSA	CA50168	CA50167	Male/Maschio
	8040-ACM2-UWA	CA50168	CA50167	Male/Maschio
	8040-ACM2-TSFA	CA50161	CA50165	Male/Maschio
	8040-ACM2-TSA	CA50168	CA50167	Male/Maschio
	8040-SB20-TSA	CA50168	CA50167	Male/Maschio
	8040-X201-TSFA	CA50161	CA50165	Male/Maschio
	8040-X201-TSA	CA50168	CA50167	Male/Maschio
	8040-ACMA4-TSA	CA50168	-	Male/Maschio
	8040-ACMA4-UWA	CA50168	-	Male/Maschio
	8040-ACMA-TSA	CA50168	-	Male/Maschio

www.hytekintl.com info@hytekintl.com

hytek
hydrotechnologies

SIDE PORT

QUALITA' ASSOLUTA
OVER THE QUALITY

www.hytekintl.com info@hytekintl.com

VANTAGGI DEI PRESSURE VESSELS OCTALINE / OCTALINE PRESSURE VESSELS ADVANTAGES

www.hytekintl.com info@hytekintl.com

RIDUZIONE DELLE PERDITE E DELLE ROTTURE

La forma ottagonale garantisce una perfetta tenuta sul Vessel Side Port minimizzando le probabilità di perdite

LEAKAGE AND BREAKING REDUCTION

The octagonal shape allows a perfect seal on the side port of the vessel and will reduce all leakages.

ESTREMA FACILITA' NELLA MANUTENZIONE

Le porte laterali svitabili, garantiscono un' adattabilità idraulica superiore alla norma, riducendo altresì considerevolmente i tempi di manutenzione.

La forma ottagonale garantisce una perfetta tenuta sul Vessel Side Port minimizzando le probabilità di perdite.

VERY SIMPLE MAINTENANCE

The side ports can be unscrewed and can have a good hydraulic adaptability and they will reduce also the maintenance time..

The octagonal shape allows a perfect seal on the side port of the vessel and will reduce all leakages.

VANTAGGI CHIMICO MECCANICI DELLE TESTATE

I maggiori vantaggi delle testate, sono dovuti all' utilizzo di materiali di alta qualità (Noryl) ed estrema affidabilità (certificati NSF).

Queste migliorie si possono identificare con:

La riduzione delle potenziali perdite nei punti critici della testata, attraverso l' eliminazione del giunto di chiusura sulla porta del permeato (disponibile per i Vessels Non-ASME Coded fino ai modelli da 600 PSI)

L' utilizzo di materiali con eccellente resistenza agli agenti chimici

L' applicabilità anche su alte temperature di esercizio (88°C per i modelli fino a 600 PSI e 66°C per i 1000 PSI E 1200 PSI)

CHEMICAL AND MECHANICAL ADVANTAGES OF THE HEADS

The most advantages of the heads are due to the use of high quality materials such as NORYL and to the good trust (NSF certificates).

These improvements can be identified with:

The leakage reduction on the critical points of the head, through the elimination of the closure joint on the permeate port (available for the vessels NON ASME CODED up to models 600 psi)

The utilization of materials with great resistance to chemical agents

It can be used also in high working temperatures (88°C for the models up to 600 PSI and 66°C for the 1000 PSI and 1200 psi).

RAPIDO MECCANISMO DI CHIUSURA DELLE TESTATE

Il Seeger di chiusura a spirale, evita l' utilizzo di attrezzi particolari per lo smontaggio delle testate, abbreviando i tempi di inserimento ed estrazione delle membrane.

FAST CLOSURE HEAD MECHANISM

The winding closure seeger avoids the use of particular tools for dismounting the heads, and shortens the connection and extraction time for the membrane

MIGLIORIA SULL' ALLOGGIAMNETO DELL' O-RING DELLE TESTATE

L' o-ring di tenuta sulle testate, è stato alloggiato direttamente sulle stesse in un apposito incavo, evitando la rotazione e/o lo spostamento dello stesso con conseguenti problemi di tenuta.

IMPROVEMENT ON THE O'RING HEAD POSITION

The o'ring seal is located directly on the head in a special groove in order to avoid to be rotated or removed.

FLESSIBILITA' SULLA SCELTA DELLA PORTA PERMEATO

Il particolare disegno delle testate, permette di scegliere due diverse soluzioni sulla porta del permeato: 1" FNPT o 1.5"

*L' opzione di cui sopra è disponibile standard nei modelli Non-Coded, mentre è opzionale per i modelli ASME-Coded.

FLEXIBILITY ON THE PERMEATE PORT CHOICE

The special head design allows the choice of two different solutions on the permeate port : 1" FNPT or 1.5"

**The above option is available standard in the models non coded, while it is an option for the AMSE-CODED models.*

ADATTATORE PER LE PORTE LATERALI INTEGRATO NEL VESSEL

Garantisce una tenuta meccanica migliore portandola all' eccellenza

ADAPTOR FOR THE SIDE PORTS INSIDE THE VESSEL

This adaptor assures the best mechanical seal.

RIDUZIONE IMPORTANTE DEI COSTI NEI SISTEMI AD ALTA PRESSIONE

E' possibile estendere l' alta tecnologia e affidabilità OCTALINE Multi Port (più porte laterali su uno stesso lato vessel), fino ai 1000 PSI e 1200 PSI. Tale opportunità permette una notevole riduzione della raccorderai, comprimendo i costi di installazione e investimento impianto.

BIG COST REDUCTION IN THE HIGH PRESSURE SYSTEMS

It is possible to enlarge the OCTALINE Multi Port high technology (more side ports on the same vessel side) up to 1000 and 1200 PSI.

This will give the opportunity to reduce the connections and, consequently, the installation and investment costs.

www.hytekintl.com info@hytekintl.com

PRESSURE VESSELS CODELINE 8"-150 PSI PV 80S15 "CODED" SIDE PORT

PV 80S15 CODELINE "CODED"

MATERIALE DI COMPOSIZIONE:
- Vessel: _____Vetroresina
- Tappi: _____Lega di alluminio 6061-T6
- Anello di chiusura tappo:_____ 316 SST
- Basamento tappo: _____ materiale termoplastico
- Selle (incluse): _____ materiale termoplastico (nr. 2 per vessel fino al 3 elementi, dal 4 elementi fino al 6 elementi nr. 3 per vessel).
- Tiranti (inclusi):_____in AISI 304 e cuscini in PVC (nr. 2 per vessel fino al 3 elementi, dal 4 elementi fino al 6 elementi nr. 3 per vessel).

DATI TECNICI
- Pressione di progetto: _____ 10 bar a 88°C (150 psi a 190°F)
- Temperatura minima di esercizio: _____ -7°C (20°F)
- Pressione di collaudo:
• ASME 13 bar (195 psi)
• CE 15 bar (225 psi)
- Pressione di scoppio: _____ 62 bar (900 psi)
- Uscita permeato: _____ 1" NPT femmina
- Uscita concentrato: _____ 1 1/2" in AISI 316L connessione per giunto victaulic (giunto victaulic non incluso)
- Posizione porte laterali: _____ Standard a squadro
- Colore Standard: _____Bianco
- Connettori per membrana (non inclusi):___ Tramite adapter (2 x vessel, vedi documentazione tecnica)
- Nr. di elementi disponibili: _____1-2-3-4-5-6-7

CERTIFICATI:
- Ispezione e marcatura ASME CODE (quotazione su richiesta)
- Marcatura CE (quotazione su richiesta)
- Direttiva 97/23/CE (PED)
- NSF/ANSI 61
- ISO 9001:2000

APPLICAZIONI:
- Osmosi inversa;
- Ultrafiltrazione.

ACCESSORI DA ORDINARE A PARTE:
- Adapter: nr. 2 x vessel (vedi documentazione tecnica).
- Giunti Victaulic 1 1/2" VIC0001
- Sample Pro Valve (prelievo permeato): _____ CA0001

TRATTAMENTO DELLE ACQUE:
- Domestiche
- Industriali
- Municipali
- Reflue (conntattare l' Ufficio tecnico Hytek)
- di mare
- Farmaceutiche
- Alimentari

"CODED" CODELINE PV 80S15

MATERIALS COMPOSITION:
- Shell material: _____Fiberglass
- Plugs: _____ 6061-T6 Hard anodized Alum. alloy
- Retaining ring _____ 316 SST
- Bearing ring _____ Engineering thermoplastic
- Saddles (included): _____Engineering thermoplastic (nr. 2 supports required up to 3 elements, 3 supports required for length 4 and over)
- Straps (included): _____AISI 304 and cushion in PVC (nr. 2 straps required up to 3 elements, 3 supports required for length 4 and over)

TECHNICAL SHEET:
- Design Pressure: _____ 10 bar a 88°C (150 psi at 190°F)
- Min. Operating temperature: _____ -7°C (20°F)
- Factory Test Pressure:
• ASME 13 bar (195 psi)
• CE 15 bar (225 psi)
- Burst Pressure: _____ 62 bar (900 psi)
-Permeate Port: _____ 1" NPT female
- Concentrate Port: _____1 1/2" in AISI 316L connection for victaulic joint (victaulic joint not included)
- Side Port Position: _____ Standard square
- Standard color: _____ White
- Connection for membrane (not included): _____ By Adapter (2 x vessel, see technical documentation)
- Nr. elements available: _____1-2-3-4-5-6-7

CERTIFICATIONS:
- Inspection and ASME CODE stamped (quotation on request)
- CE mark stamped (quotation on request)
- 97/23/CE Directive (PED)
- NSF/ANSI 61
- ISO 9001:2000

APPLICATIONS:
- Reverse Osmose
- Ultrafiltration.

ACCESSORIES TO BE ORDERED SEPARATELY:
- Adapter: 2 x vessel, see technical documentation
- Victaulic Joints 1 1/2" VIC0001
- Sample Pro Valve (permeate stream): _____ CA0001

WATER TREATMENTS
- Domestics
- Industrials
- Municipals
- Drains (contact Hytek Technical Office)
- Sea
- Farmaceutics
- Alimentary

www.hytekintl.com info@hytekintl.com

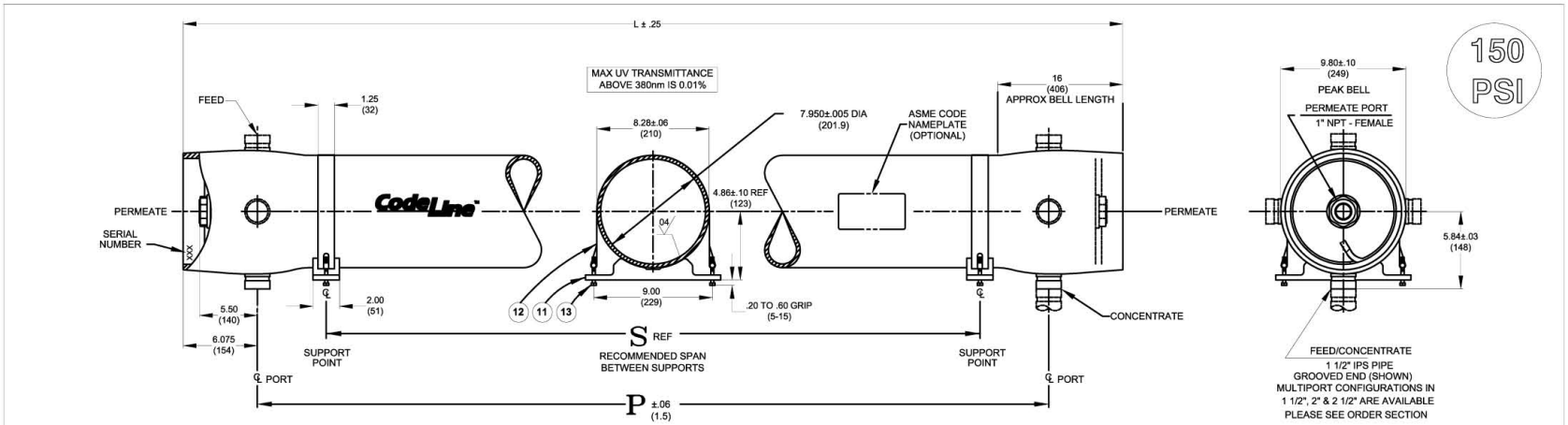

VIEW AT CENTER SUPPORT

CENTER VESSEL ON 2 OR 3 SUPPORTS AT SPAN(S) "S" : 3 SUPPORTS REQUIRED FOR LENGTHS -4 AND OVER

CAUTION: INCORRECT MANIFOLDING WILL CAUSE SEVERE LOCAL STRESS AROUND PORT AND MAY RESULT IN LEAKS AND PREMATURE FAILURE; TAKE EVERY PRECAUTION LISTED ON REVERSE, SEE INSTALLATION INSTRUCTIONS FOR FURTHER DETAILS

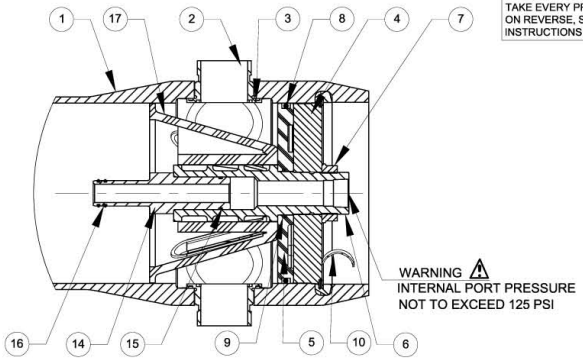

SECTION THROUGH END CLOSURE

DWG REF	QTY	PART NUMBER	DESCRIPTION	MATERIAL
SHELL				
1	1	ORDER SECTION	SHELL	Filament Wound Epoxy/Glass composites - Head locking grooves integrally wound in place.
2	A/R		F/C Port	316 L Stainless Steel / Equivalent.
3	A/R		F/C Port Seal	Ethylene Propylene.
HEAD				
4	2	96156	Bearing Plate	6061-T6 Aluminium alloy - Hard anodized
5	2	96160	Sealing Plate	Engineering Thermoplastic.
6	2	96162	Permeate Port	Engineering Thermoplastic.
7	2	45066	Port Nut	Engineering Thermoplastic.
8	2	96000	Head Seal	Ethylene Propylene - O - Ring
9	2	45312	Perm Port Seal	Ethylene Propylene - O - Ring
HEAD INTERLOCK				
10	2	47336	QuikRelease Spiral Ring	316 Stainless Steel.
VESSEL SUPPORT				
11	* 2	52169	Saddle	Engineering Thermoplastic.
12	* 2	45042	Strap Assy.	304 Stainless Steel-PVC Cushion.
13	4	46265	Strap screw.	5/16-18 UNC, 18-8 Stainless Steel.
ELEMENT INTERFACE				
14	2	A/R	Adapter	Engineering Thermoplastic.
15	2	52245	Adapter seal	Ethylene Propylene - O - Ring
16	4	A/R	PWT Seal	Ethylene Propylene - O - Ring
17	1	96163	Thrust Cone	Engineering Thermoplastic.
* 3 each furnished with length code 4,5,6,7 & 8.				

Dash Length	L IN(MM)	P IN(MM)	S IN(MM)	Approx Weight LB(KG)
-1	59.15 (1502)	47 (1194)	25X1 (635)	55 (25)
-2	99.15 (2518)	87 (2210)	56X1 (1422)	64 (29)
-3	139.15 (3534)	127 (3226)	80X1 (2032)	73 (33)
-4	179.15 (4550)	167 (4242)	64X2 (1626)	82 (37)
-5	219.15 (5566)	207 (5258)	78X2 (1981)	90 (41)
-6	259.15 (6582)	247 (6274)	92X2 (2337)	99 (45)
-7	299.15 (7598)	287 (7290)	106X2 (2692)	108 (49)
# -8	339.15 (8614)	327 (8306)	120X2 (3048)	117 (53)

NOTES:-
- MAX. ANGULAR VARIATION BETWEEN ANY PORTS ±0.5°.
- DIMENSION IN INCHES (MM APPROX.)
- SHELL EXTERIOR COATED WITH WHITE, HIGH GLOSS POLYURETHANE PAINT.
- NOT TO BE USED FOR CONSTRUCTION UNLESS CERTIFIED.
- ITEM 17 DOWNSTREAM ONLY.

CodeLine™ Pentair Water

DRAWN	PGS	CODELINE - 80S15 MEMBRANE HOUSING			
CHECKED	MD	DATE 17MAR06	DWG. NO. 99159		REV. A
APPROVED	RM	ECN 817	SCALE NONE	SIZE A3	SHEET 1OF 2

RATING:

DESIGN PRESSURE……..…...150 PSIG at 190°F (1.0 MPa at 88°C)
MIN. OPERATING TEMP……..…...……..20°F (-7°C)
FACTORY TEST PRESSURE…..…… CE / ASME
225 PSIG / 195 PSIG
(1.6 MPa) (1.3 MPa)
QUALIFICATION PRESSURE…… 900 PSI (6.2 MPa)

INTENDED USE:

The CodeLine 80S15 Fiberglass RO Pressure Vessel is designed for continuous, long term use as a housing for reverse osmosis membrane elements to desalt typical brackish waters at pressures up to 150 psi. Any make of eight-inch nominal diameter spiral-wound element is easily accommodated; the appropriate interfacing hardware for the element specified is furnished with the vessel.

The CodeLine 80S15 is designed in accordance with the engineering standards of the Boiler and Pressure Vessel Code of the American Society of Mechanical Engineers (ASME) Code. At small additional cost vessels can be inspected during construction by an ASME Authorized Inspector and ASME Code stamped.

The CodeLine 80S15 must be installed, operated and maintained in accordance with the listed precautions and good industrial practice to assure safe operation over a long service life.

The high performance Filament wound FRP shell must be allowed to expand under pressure; undue restraint at support points or piping connections can cause leaks to develop in the shell. This side-ported vessel requires special precautions in mounting and connection to piping so that the vessel will not be subjected to excessive stress due to bending moments acting at the side openings in the fiberglass shell. The end closure, incorporating close fitting, interlocking metal components, must be kept dry and free of corrosion; deterioration can lead to catastrophic mechanical failure of the head.

Pentair Water will assist the purchaser in determining the suitability of this standard vessel for their specific operating conditions. The final determination however, including evaluation of the standard material of construction for compatibility with the specific corrosive environment, shall be the responsibility of the purchaser. Alternate materials with enhanced corrosion resistance are available on special order.

Specifications are subject to change without notice.

PRECAUTIONS:

DO…read, understand and follow all instructions; failure to take every precaution will void warranty and may result in vessel failure
DO…mount the shell on horizontal members at span "S" using compliant vessel supports furnished; tighten hold down straps just snug
DO…align and center side ports with the manifold header. Correct, causes of misalignment in a row of vessels connected to the same header
DO…use flexible type grooved-end pipe couplings, Victaulic® Style 77 or equal, at side ports; allow full, 0.125 inch gap between port and piping, and position piping to maximize flexibility of connection.
DO…provide flexibility in, and support for piping manifolds so that vessel can grow in length under pressure without undue restraint; provide additional flexible joints in large pipes leading to manifold header.
DO…provide overpressure protection for vessel set at not more than 105% of design pressure
DO…inspect end closures regularly; replace components that have deteriorated and correct causes of corrosion

DO NOT…work on any component until first verifying that pressure is relieved from vessel
DO NOT…make rigid piping connections to ports or clamp vessel in any way that resists growth of fiberglass shell under pressure;
***ΔDIA = 0.015 in. (0.4mm) and
***ΔL = 0.2 in. (6mm) for a length code –8 vessel
DO NOT… hang piping manifolds from ports or use vessel in any way to support other components
DO NOT…tighten Permeate Port connection more than one turn past hand tight
DO NOT… operate vessel without connecting both Permeate Ports internally to complete set of elements or otherwise plug ports internally so that external piping connection is not subjected to feed pressure
DO NOT…install Spacer on downstream end of vessel
DO NOT…operate vessel without Thrust Cone installed downstream
DO NOT…pressurize vessel until double-checking to verify that the Locking Ring is in place and fully seated.
DO NOT…operate vessel at pressure and temperature in excess of its rating.
DO NOT…operate vessel with permeate pressure in excess of 125 psi at 190°F (0.86 MPa at 88°C).
DO NOT…tolerate leaks or allow end closures to be routinely wetted in any way
DO NOT…operate outside the pH range of 3-10.

ORDERING:
Using the chart below, please check the features you require and fax them with your purchase order to our customer service department for further processing.
For optional materials and / or feature not listed below, please consult the factory for pricing and availability

VESSEL LENGTH CODE – please check one

MODEL 80S15 ☐ -1 ☐ -2 ☐ -3 ☐ -4 ☐ -5 ☐ -6 ☐ -7 ☐ -8
Consult Sales Manager for Eight Element Housings.

MEMBRANE BRAND AND MODEL – please check one and fill in information

- ❑ Please supply adapters for the following membrane brand and specific model
  Brand_____ Model_____
- ❑ Membrane brand and model information is not currently available, but will be supplied to Pentair Water on or before the following date. ___ / ___ / ___

CERTIFICATION REQUIRED

- ❑ ASME Stamped and National Board Registered (Please consult factory for pricing)
- ❑ CE Marked
- ❑ Standard, Certified by Pentair Water .

MATERIAL AND PORT CONFIGURATIONS OPTIONS – please check one
- ❑ Standard: all materials and port configurations as per drawing 99159 on the previous page
  NOTE: The options listed below will increase the vessel price. Call factory for pricing details.
- ❑ Option: Customer specified port configuration. Using the chart below, please indicate the customized options you require for each end of the pressure vessel (multiple options are available at each end).
  (Please consult factory as these options will affect pricing and vessel lead time)

FEED PORT CONFIGURATION
- ❑ Standard – 1½" IPS pipe, grooved ends, with ports in-line
- ❑ Optional – Multi-Ports™
  Using the instructions in Order Specification Sheet #99007 please fill out your feed port configuration in the space below. List port location first, followed by port size for each choice.

Serial number end ☐☐☐☐☐☐☐☐
Opposite end ☐☐☐☐☐☐☐☐

PORT SIZE CODE	
D	1½" GROOVED END
E	2" GROOVED END
F	2½" GROOVED END

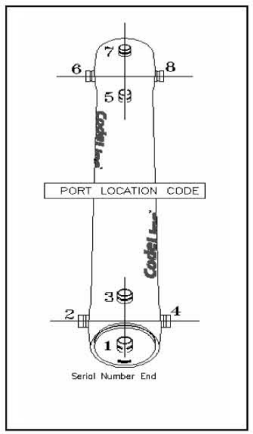

PERMEATE PORT CONFIGURATION:

- ❑ Standard 1" FNPT.
- ❑ Optional – 1.25" MNPT.

For complete information on proper use of the vessel
Please refer to the 80S Series USER'S GUIDE 94182.

PRESSURE VESSELS CODELINE 8"-150 PSI PV 80S15NC "NO CODED" SIDE PORT

PV 80S15NC CODELINE "NO CODED"

MATERIALE DI COMPOSIZIONE:
- Vessel: _____Vetroresina
- Tappi: _____ materiale termoplastico
- Anello rapido di chiusura tappo:_____ 316 SST
- Selle (incluse): _____ materiale termoplastico (nr. 2 per vessel fino al 3 elementi, dal 4 elementi fino al 6 elementi nr. 3 per vessel).
- Tiranti (inclusi):_____in AISI 304 e cuscini in PVC (nr. 2 per vessel fino al 3 elementi, dal 4 elementi fino al 6 elementi nr. 3 per vessel).

DATI TECNICI
- Pressione di progetto: _____ 10 bar a 88°C (150 psi a 190°F)
- Temperatura minima di esercizio: _____ -7°C (20°F)
- Pressione di collaudo: _____ 15 bar (225 psi)
- Pressione di scoppio: _____ 62 bar (900 psi)
- Uscita permeato: ___ 1" NPT femmina & 1 1/2" in PVC connessione per giunto victaulic (giunto victaulic non incluso)
- Uscita concentrato: _____ 1 1/2" in AISI 316L connessione per giunto victaulic (giunto victaulic non incluso)
- Posizione porte laterali: _____ Standard a squadro
- Colore Standard: _____Bianco
- Connettori per membrana (non inclusi):___ Tramite adapter (2 x vessel, vedi documentazione tecnica)
- Nr. di elementi disponibili: _____1-2-3-4-5-6-7

CERTIFICATI:
- Marcatura CE (su richiesta)
- Direttiva 97/23/CE (PED)
- NSF/ANSI 61
- ISO 9001:2000

APPLICAZIONI:
- Osmosi inversa;
- Ultrafiltrazione.

ACCESSORI DA ORDINARE A PARTE:
- Adapter: nr. 2 x vessel (vedi documentazione tecnica).
- Giunti Victaulic 1 1/2" VIC0001
- Sample Pro Valve (prelievo permeato): _____ CA0001

TRATTAMENTO DELLE ACQUE:
- Domestiche
- Industriali
- Municipali
- Reflue (conntattare l' Ufficio tecnico Hytek)
- di mare
- Farmaceutiche
- Alimentari

"NO CODED" CODELINE PV 80S15NC

MATERIALS COMPOSITION:
- Shell material: _____Fiberglass
- Plugs: _____ Engineering thermoplastic
- Retaining ring _____ 316 SST
- Saddles (included): _____Engineering thermoplastic (nr. 2 supports required up to 3 elements, 3 supports required for length 4 and over)
- Straps (included): _____AISI 304 and cushion in PVC (nr. 2 straps required up to 3 elements, 3 supports required for length 4 and over)

TECHNICAL SHEET:
- Design Pressure: _____ 10 bar a 88°C (150 psi at 190°F)
- Min. Operating temperature: _____ -7°C (20°F)
- Factory Test Pressure: _____ 15 bar (225 psi)
- Burst Pressure: _____ 62 bar (900 psi)
- Permeate Port: ____ 1" NPT female & 1 1/2" in PVC connection for victaulic joint (victaulic joint not included)
- Concentrate Port: _____1 1/2" in AISI 316L connection for victaulic joint (victaulic joint not included)
- Side Port Position: _____ Standard square
- Standard color: _____ White
- Connection for membrane (not included): _____ By Adapter (2 x vessel, see technical documentation)
- Nr. elements available: _____1-2-3-4-5-6-7

CERTIFICATIONS:
- CE mark stamped (quotation on request)
- 97/23/CE Directive (PED)
- NSF/ANSI 61
- ISO 9001:2000

APPLICATIONS:
- Reverse Osmose
- Ultrafiltration.

ACCESSORIES TO BE ORDERED SEPARATELY:
- Adapter: 2 x vessel, see technical documentation
- Victaulic Joints 1 1/2" VIC0001
- Sample Pro Valve (permeate stream): _____ CA0001

WATER TREATMENTS
- Domestics
- Industrials
- Municipals
- Drains (contact Hytek Technical Office)
- Sea
- Farmaceutics
- Alimentary

www.hytekintl.com info@hytekintl.com

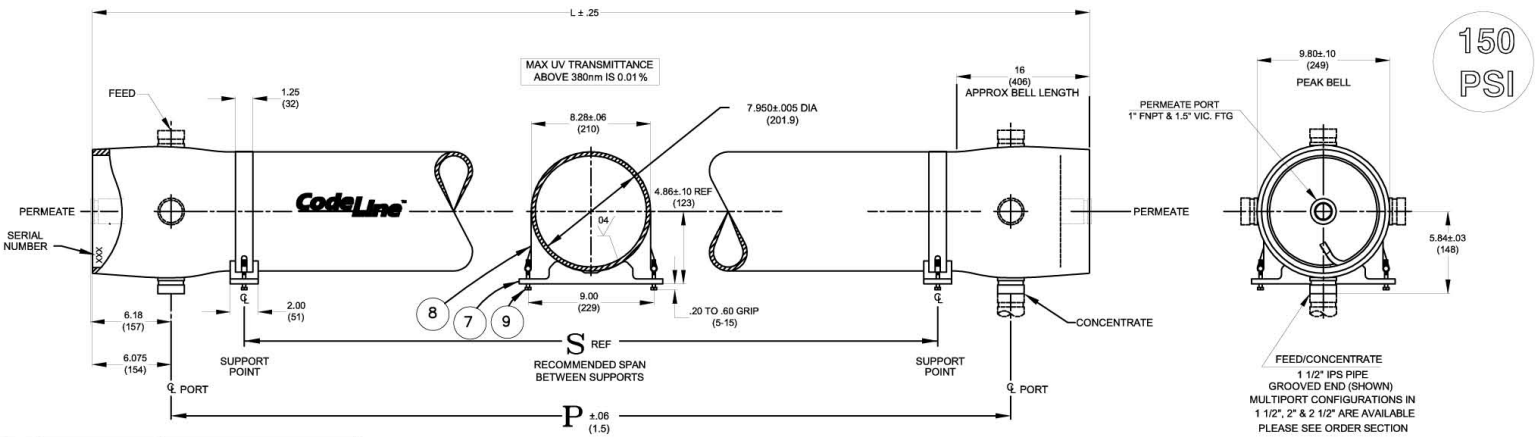

DWG REF	QTY	PART NUMBER	DESCRIPTION	MATERIAL
SHELL				
1	1	ORDER SECTION	SHELL	Filament Wound Epoxy/Glass composites - Head locking grooves integrally wound in place.
2	A/R		F/C Port	316 L Stainless Steel / Equivalent.
3	A/R		F/C Port Seal	Ethylene Propylene .
HEAD - NON CODED				
4	2	96247	Elliptical Head Assy.	Engineering Thermoplastic.
5	2	96000	Head Seal	Ethylene Propylene - O - Ring
HEAD INTERLOCK				
6	2	47336	Quik Release Spiral Ring	316 Stainless Steel.
VESSEL SUPPORT				
7	* 2	52169	Saddle	Engineering Thermoplastic.
8	* 2	45042	Strap Assy.	304 Stainless Steel-PVC Cushion.
9	4	46265	Strap screw.	5/16-18 UNC, 18-8 Stainless Steel.
ELEMENT INTERFACE				
10	2	A/R	Adapter	Engineering Thermoplastic.
11	2	52245	Adapter seal	Ethylene Propylene - O - Ring
12	4	A/R	PWT Seal	Ethylene Propylene - O - Ring
13	1	52609	Thrust Cone	Engineering Thermoplastic.
* 3 each furnished with length code 4,5,6,7 & 8.				

VIEW AT CENTER SUPPORT

CENTER VESSEL ON 2 OR 3 SUPPORTS AT SPAN(S) "S" : 3 SUPPORTS REQUIRED FOR LENGTHS -4 AND OVER

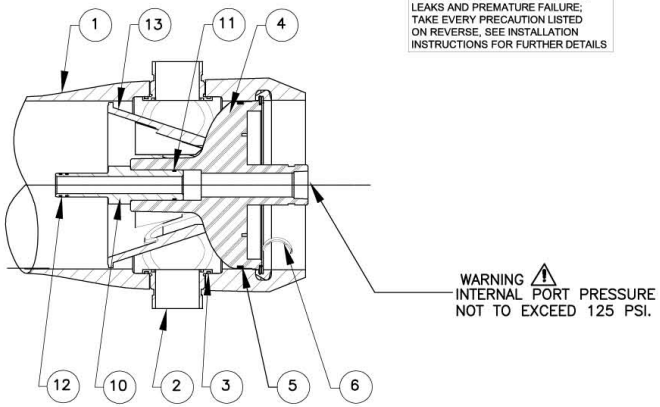

SECTION THROUGH END CLOSURE

CAUTION: INCORRECT MANIFOLDING WILL CAUSE SEVERE LOCAL STRESS AROUND PORT AND MAY RESULT IN LEAKS AND PREMATURE FAILURE; TAKE EVERY PRECAUTION LISTED ON REVERSE, SEE INSTALLATION INSTRUCTIONS FOR FURTHER DETAILS

Dash Length	L IN(MM)	P IN(MM)	S IN(MM)	Approx Weight LB(KG)
-1	59.15 (1502)	47 (1194)	25X1 (635)	49 (22)
-2	99.15 (2518)	87 (2210)	56X1 (1422)	57 (26)
-3	139.15 (3534)	127 (3226)	80X1 (2032)	66 (30)
-4	179.15 (4550)	167 (4242)	64X2 (1626)	75 (34)
-5	219.15 (5566)	207 (5258)	78X2 (1981)	84 (38)
-6	259.15 (6582)	247 (6274)	92X2 (2337)	93 (42)
-7	299.15 (7598)	287 (7290)	106X2 (2692)	101 (46)
# -8	339.15 (8614)	327 (8306)	120X2 (3048)	110 (50)

NOTES:-
- MAX. ANGULAR VARIATION BETWEEN ANY PORTS ±0.5°.
- DIMENSION IN INCHES (MM APPROX.)
- SHELL EXTERIOR COATED WITH WHITE, HIGH GLOSS POLYURETHANE PAINT.
- NOT TO BE USED FOR CONSTRUCTION UNLESS CERTIFIED.
- ITEM 13 DOWNSTREAM ONLY.

CodeLine™ Pentair Water

DRAWN	KR	CODELINE - 80S15(NON-CODED) MEMBRANE HOUSING			
CHECKED	MD	DATE 05NOV07	DWG. NO. 99171		REV. B
APPROVED	RM	ECN 1104	SCALE NONE	SIZE A3	SHEET 1OF 2

RATING:

DESIGN PRESSURE……....150 PSIG at 190°F (1.0 MPa at 88°C)
MIN. OPERATING TEMP……..…...……..20°F (-7°C)
FACTORY TEST PRESSURE…….225 PSIG (1.6MPa)

QUALIFICATION PRESSURE…… 900 PSI (6.2 MPa)

INTENDED USE:

The CodeLine 80S15 Non Coded Fiberglass RO Pressure Vessel is designed for continuous, long term use as a housing for reverse osmosis membrane elements to desalt typical brackish waters at pressures up to 150 psi. Any make of eight-inch nominal diameter spiral-wound element is easily accommodated; the appropriate interfacing hardware for the element specified is furnished with the vessel.

The Shell of CodeLine 80S15 Non Coded is designed in accordance with the engineering standards of the Boiler and Pressure Vessel Code of the American Society of Mechanical Engineers (ASME) Code.

The CodeLine 80S15 Non Coded must be installed, operated and maintained in accordance with the listed precautions and good industrial practice to assure safe operation over a long service life.

The high performance Filament wound FRP shell must be allowed to expand under pressure; undue restraint at support points or piping connections can cause leaks to develop in the shell. This side-ported vessel requires special precautions in mounting and connection to piping so that the vessel will not be subjected to excessive stress due to bending moments acting at the side openings in the fiberglass shell. The end closure, incorporating close fitting, interlocking metal components, must be kept dry and free of corrosion; deterioration can lead to catastrophic mechanical failure of the head.

Pentair Water will assist the purchaser in determining the suitability of this standard vessel for their specific operating conditions. The final determination however, including evaluation of the standard material of construction for compatibility with the specific corrosive environment, shall be the responsibility of the purchaser. Alternate materials with enhanced corrosion resistance are available on special order.

Specifications are subject to change without notice.

PRECAUTIONS:

DO…read, understand and follow all instructions; failure to take every precaution will void warranty and may result in vessel failure
DO…mount the shell on horizontal members at span "S" using compliant vessel supports furnished; tighten hold down straps just snug
DO…align and center side ports with the manifold header. Correct, causes of misalignment in a row of vessels connected to the same header
DO…use flexible type grooved-end pipe couplings, Victaulic® Style 77 or equal, at side ports; allow full, 0.125 inch gap between port and piping, and position piping to maximize flexibility of connection.
DO…provide flexibility in, and support for piping manifolds so that vessel can grow in length under pressure without undue restraint; provide additional flexible joints in large pipes leading to manifold header.
DO…provide overpressure protection for vessel set at not more than 105% of design pressure
DO…inspect end closures regularly; replace components that have deteriorated and correct causes of corrosion

DO NOT…work on any component until first verifying that pressure is relieved from vessel
DO NOT…make rigid piping connections to ports or clamp vessel in any way that resists growth of fiberglass shell under pressure;
***ΔDIA = 0.015 in. (0.4mm) and
***ΔL = 0.2 in. (6mm) for a length code –8 vessel
DO NOT… hang piping manifolds from ports or use vessel in any way to support other components
DO NOT…tighten Permeate Port connection more than one turn past hand tight
DO NOT… operate vessel without connecting both Permeate Ports internally to complete set of elements or otherwise plug ports internally so that external piping connection is not subjected to feed pressure
DO NOT…install Spacer on downstream end of vessel
DO NOT…operate vessel without Thrust Cone installed downstream
DO NOT…pressurize vessel until double-checking to verify that the Locking Ring is in place and fully seated.
DO NOT…operate vessel at pressure and temperature in excess of its rating.
DO NOT…operate vessel with permeate pressure in excess of 125 psi at 190°F (0.86 MPa at 88°C).
DO NOT…tolerate leaks or allow end closures to be routinely wetted in any way
DO NOT…operate outside the pH range of 3-10.

ORDERING:
Using the chart below, please check the features you require and fax them with your purchase order to our customer service department for further processing.
For optional materials and / or feature not listed below, please consult the factory for pricing and availability

VESSEL LENGTH CODE – please check one

MODEL 80S15 Non Coded ☐ -1 ☐ -2 ☐ -3 ☐ -4 ☐ -5 ☐ -6 ☐ -7 ☐ -8
Consult Sales Manager for Eight Element Housings.

MEMBRANE BRAND AND MODEL – please check one and fill in information

- ❑ Please supply adapters for the following membrane brand and specific model
  Brand_____ Model_____
- ❑ Membrane brand and model information is not currently available, but will be supplied to Pentair Water on or before the following date. ___ / ___ / ___

CERTIFICATION REQUIRED

- ❑ CE Marked
- ❑ Standard, Certified by Pentair Water.

MATERIAL AND PORT CONFIGURATIONS OPTIONS – please check one
- ❑ Standard: all materials and port configurations as per drawing 99171 on the previous page
  NOTE: The options listed below will increase the vessel price. Call factory for pricing details.
- ❑ Option: Customer specified port configuration. Using the chart below, please indicate the customized options you require for each end of the pressure vessel (multiple options are available at each end).
  (Please consult factory as these options will affect pricing and vessel lead time)

FEED PORT CONFIGURATION
- ❑ Standard – 1½" IPS pipe, grooved ends, with ports in-line
- ❑ Optional – Multi-Ports™
  Using the instructions in Order Specification Sheet #99007 please fill out your feed port configuration in the space below. List port location first, followed by port size for each choice.

Serial number end ☐ ☐ ☐ ☐ ☐ ☐ ☐ ☐ ☐
Opposite end ☐ ☐ ☐ ☐ ☐ ☐ ☐ ☐ ☐

PERMEATE PORT CONFIGURATION:

- ❑ Standard. 1" FNPT & 1.5" VICTUALIC.
- ❑ Optional .1" BSP F/JIS F Parallel Thread & 1.5" VIC.

For complete information on proper use of the vessel
Please refer to the 80S Series USER'S GUIDE 94182.

PORT SIZE CODE	
D	1½" GROOVED END
E	2" GROOVED END
F	2½" GROOVED END

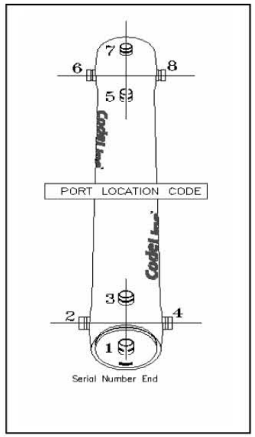

PRESSURE VESSELS CODELINE 8"-300 PSI PV 80S30 "CODED" SIDE PORT

PV 80S30 CODELINE "CODED"

MATERIALE DI COMPOSIZIONE:
- Vessel: _____Vetroresina
- Tappi: _____Lega di alluminio 6061-T6
- Anello di chiusura tappo:_____ 316 SST
- Basamento tappo: _____ materiale termoplastico
- Selle (incluse): _____ materiale termoplastico (nr. 2 per vessel fino al 3 elementi, dal 4 elementi fino al 6 elementi nr. 3 per vessel).
- Tiranti (inclusi):_____in AISI 304 e cuscini in PVC (nr. 2 per vessel fino al 3 elementi, dal 4 elementi fino al 6 elementi nr. 3 per vessel).

DATI TECNICI
- Pressione di progetto: _____ 21 bar a 88°C (300 psi a 190°F)
- Temperatura minima di esercizio: _____ -7°C (20°F)
- Pressione di collaudo:
• ASME 27 bar (390 psi)
• CE 31 bar (450 psi)
- Pressione di scoppio: _____ 124 bar (1800 psi)
- Uscita permeato: _____ 1" NPT femmina
- Uscita concentrato: _____ 1 1/2" in AISI 316L connessione per giunto victaulic (giunto victaulic non incluso)
- Posizione porte laterali: _____ Standard a squadro
- Colore Standard: _____Bianco
- Connettori per membrana (non inclusi):___ Tramite adapter (2 x vessel, vedi documentazione tecnica)
- Nr. di elementi disponibili: _____1-2-3-4-5-6-7

CERTIFICATI:
- Ispezione e marcatura ASME CODE (quotazione su richiesta)
- Marcatura CE (quotazione su richiesta)
- Direttiva 97/23/CE (PED)
- NSF/ANSI 61
- ISO 9001:2000

APPLICAZIONI:
- Osmosi inversa;
- Ultrafiltrazione.

ACCESSORI DA ORDINARE A PARTE:
- Adapter: nr. 2 x vessel (vedi documentazione tecnica).
- Giunti Victaulic 1 1/2" VIC0001
- Sample Pro Valve (prelievo permeato): _____ CA0001

TRATTAMENTO DELLE ACQUE:
- Domestiche
- Industriali
- Municipali
- Reflue (conntattare l' Ufficio tecnico Hytek)
- di mare
- Farmaceutiche
- Alimentari

"CODED" CODELINE PV 80S30

MATERIALS COMPOSITION:
- Shell material: _____Fiberglass
- Plugs: _____ 6061-T6 Hard anodized Alum. alloy
- Retaining ring _____ 316 SST
- Bearing ring _____ Engineering thermoplastic
- Saddles (included): _____Engineering thermoplastic (nr. 2 supports required up to 3 elements, 3 supports required for length 4 and over)
- Straps (included): _____AISI 304 and cushion in PVC (nr. 2 straps required up to 3 elements, 3 supports required for length 4 and over)

TECHNICAL SHEET:
- Design Pressure: _____ 21 bar a 88°C (300 psi at 190°F)
- Min. Operating temperature: _____ -7°C (20°F)
- Factory Test Pressure:
• ASME 27 bar (390 psi)
• CE 31 bar (450 psi)
- Burst Pressure: _____ 124 bar (1800 psi)
-Permeate Port: _____ 1" NPT female
- Concentrate Port: _____1 1/2" in AISI 316L connection for victaulic joint (victaulic joint not included)
- Side Port Position: _____Standard square
- Standard color: _____ White
- Connection for membrane (not included): _____ By Adapter (2 x vessel, see technical documentation)
- Nr. elements available: _____1-2-3-4-5-6-7

CERTIFICATIONS:
- Inspection and ASME CODE stamped (quotation on request)
- CE mark stamped (quotation on request)
- 97/23/CE Directive (PED)
- NSF/ANSI 61
- ISO 9001:2000

APPLICATIONS:
- Reverse Osmose
- Ultrafiltration.

ACCESSORIES TO BE ORDERED SEPARATELY:
- Adapter: 2 x vessel, see technical documentation
- Victaulic Joints 1 1/2" VIC0001
- Sample Pro Valve (permeate stream): _____ CA0001

WATER TREATMENTS
- Domestics
- Industrials
- Municipals
- Drains (contact Hytek Technical Office)
- Sea
- Farmaceutics
- Alimentary

www.hytekintl.com info@hytekintl.com

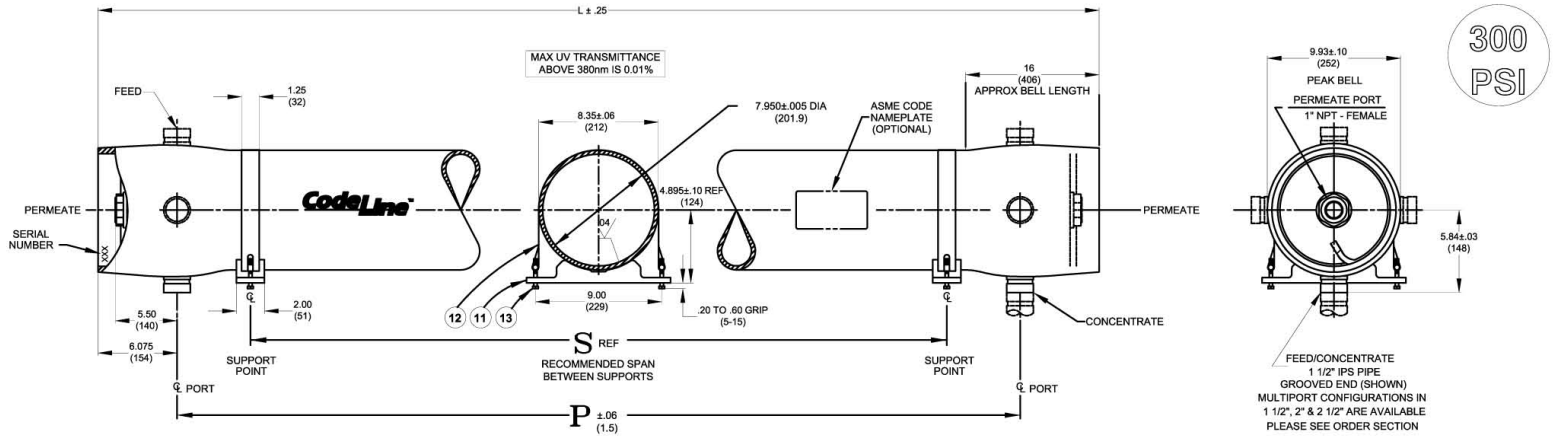

300 PSI

VIEW AT CENTER SUPPORT

CENTER VESSEL ON 2 OR 3 SUPPORTS AT SPAN(S) "S" : 3 SUPPORTS REQUIRED FOR LENGTHS -4 AND OVER

CAUTION: INCORRECT MANIFOLDING WILL CAUSE SEVERE LOCAL STRESS AROUND PORT AND MAY RESULT IN LEAKS AND PREMATURE FAILURE; TAKE EVERY PRECAUTION LISTED ON REVERSE, SEE INSTALLATION INSTRUCTIONS FOR FURTHER DETAILS

DWG REF	QTY	PART NUMBER	DESCRIPTION	MATERIAL
SHELL				
1	1	ORDER SECTION	SHELL	Filament Wound Epoxy/Glass composites - Head locking grooves integrally wound in place.
2	A/R		F/C Port	316 L Stainless Steel / Equivalent.
3	A/R		F/C Port Seal	Ethylene Propylene.
HEAD				
4	2	96156	Bearing Plate	6061-T6 Aluminium alloy - Hard anodized
5	2	96160	Sealing Plate	Engineering Thermoplastic.
6	2	96162	Permeate Port	Engineering Thermoplastic.
7	2	45066	Port Nut	Engineering Thermoplastic.
8	2	96000	Head Seal	Ethylene Propylene - O - Ring
9	2	45312	Perm Port Seal	Ethylene Propylene - O - Ring
HEAD INTERLOCK				
10	2	47336	QuikRelease Spiral Ring	316 Stainless Steel.
VESSEL SUPPORT				
11	* 2	52169	Saddle	Engineering Thermoplastic.
12	* 2	45042	Strap Assy.	304 Stainless Steel-PVC Cushion.
13	4	46265	Strap screw.	5/16-18 UNC, 18-8 Stainless Steel.
ELEMENT INTERFACE				
14	2	A/R	Adapter	Engineering Thermoplastic.
15	2	52245	Adapter seal	Ethylene Propylene - O - Ring
16	4	A/R	PWT Seal	Ethylene Propylene - O - Ring
17	1	96163	Thrust Cone	Engineering Thermoplastic.
* 3 each furnished with length code 4,5,6,7 & 8.				

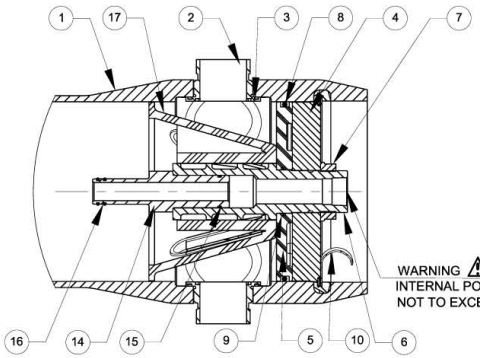

WARNING ⚠ INTERNAL PORT PRESSURE NOT TO EXCEED 125 PSI

SECTION THROUGH END CLOSURE

Dash Length	L IN(MM)	P IN(MM)	S IN(MM)	Approx Weight LB(KG)
-1	59.15 (1502)	47 (1194)	25X1 (711)	71 (32)
-2	99.15 (2518)	87 (2210)	56X1 (1422)	88 (40)
-3	139.15 (3534)	127 (3226)	80X1 (2032)	106 (48)
-4	179.15 (4550)	167 (4242)	64X2 (1626)	124 (56)
-5	219.15 (5566)	207 (5258)	78X2 (1981)	141 (64)
-6	259.15 (6582)	247 (6274)	92X2 (2337)	159 (72)
-7	299.15 (7598)	287 (7290)	106X2 (2692)	176 (80)
# -8	339.15 (8614)	327 (8306)	120X2 (3048)	193 (88)

NOTES:-
- MAX. ANGULAR VARIATION BETWEEN ANY PORTS ±0.5°.
- DIMENSION IN INCHES (MM APPROX.)
- SHELL EXTERIOR COATED WITH WHITE, HIGH GLOSS POLYURETHANE PAINT.
- NOT TO BE USED FOR CONSTRUCTION UNLESS CERTIFIED.
- ITEM 17 DOWNSTREAM ONLY.

CodeLine™ Pentair Water

DRAWN	PGS	CODELINE - 80S30 MEMBRANE HOUSING			
CHECKED	MD	DATE 02SEP05	DWG. NO. 99160		REV. B
APPROVED	RM	ECN 753	SCALE NONE	SIZE A3	SHEET 1 OF 2

RATING:

DESIGN PRESSURE……..300 PSIG at 190°F (2.1 MPa at 88°C)
MIN. OPERATING TEMP……..……20°F (-7°C)
FACTORY TEST PRESSURE…. … CE / ASME
450 PSIG / 390 PSIG
(3.1 MPa) (2.7 MPa)
QUALIFICATION PRESSURE ……..…...1800 PSI (12.4 MPa)

INTENDED USE:
The CodeLine 80S30 Fiberglass RO Pressure Vessel is designed for continuous, long term use as a housing for reverse osmosis membrane elements to desalt typical brackish waters at pressures up to 300 psi. Any make of eight-inch nominal diameter spiral-wound element is easily accommodated; the appropriate interfacing hardware for the element specified is furnished with the vessel.

The CodeLine 80S30 is designed in accordance with the engineering standards of the Boiler and Pressure Vessel Code of the American Society of Mechanical Engineers (ASME) Code. At small additional cost vessels can be inspected during construction by an ASME Authorized Inspector and ASME Code stamped.

The CodeLine 80S30 must be installed, operated and maintained in accordance with the listed precautions and good industrial practice to assure safe operation over a long service life.

The high performance Filament wound FRP shell must be allowed to expand under pressure; undue restraint at support points or piping connections can cause leaks to develop in the shell. This side-ported vessel requires special precautions in mounting and connection to piping so that the vessel will not be subjected to excessive stress due to bending moments acting at the side openings in the fiberglass shell. The end closure, incorporating close fitting, interlocking metal components, must be kept dry and free of corrosion; deterioration can lead to catastrophic mechanical failure of the head.

Pentair Water will assist the purchaser in determining the suitability of this standard vessel for their specific operating conditions. The final determination however, including evaluation of the standard material of construction for compatibility with the specific corrosive environment, shall be the responsibility of the purchaser. Alternate materials with enhanced corrosion resistance are available on special order.

Specifications are subject to change without notice.

PRECAUTIONS:

DO…read, understand and follow all instructions; failure to take every precaution will void warranty and may result in vessel failure
DO…mount the shell on horizontal members at span "S" using compliant vessel supports furnished; tighten hold down straps just snug
DO…align and center side ports with the manifold header. Correct, causes of misalignment in a row of vessels connected to the same header
DO…use flexible type grooved-end pipe couplings, Victaulic® Style 77 or equal, at side ports; allow full, 0.125 inch gap between port and piping, and position piping to maximize flexibility of connection.
DO…provide flexibility in, and support for piping manifolds so that vessel can grow in length under pressure without undue restraint; provide additional flexible joints in large pipes leading to manifold header.
DO…provide overpressure protection for vessel set at not more than 105% of design pressure
DO…inspect end closures regularly; replace components that have deteriorated and correct causes of corrosion

DO NOT…work on any component until first verifying that pressure is relieved from vessel
DO NOT…make rigid piping connections to ports or clamp vessel in any way that resists growth of fiberglass shell under pressure;
***ΔDIA = 0.015 in. (0.4mm) and
***ΔL = 0.2 in. (6mm) for a length code –8 vessel
DO NOT… hang piping manifolds from ports or use vessel in any way to support other components
DO NOT…tighten Permeate Port connection more than one turn past hand tight
DO NOT… operate vessel without connecting both Permeate Ports internally to complete set of elements or otherwise plug ports internally so that external piping connection is not subjected to feed pressure
DO NOT…install Spacer on downstream end of vessel
DO NOT…operate vessel without Thrust Cone installed downstream
DO NOT…pressurize vessel until double-checking to verify that the Locking Ring is in place and fully seated.
DO NOT…operate vessel at pressure and temperature in excess of its rating.
DO NOT…operate vessel with permeate pressure in excess of 125 psi at 190°F (0.86 Mpa at 88°C).
DO NOT…tolerate leaks or allow end closures to be routinely wetted in any way
DO NOT…operate outside the pH range 3-10.

ORDERING:
Using the chart below, please check the features you require and fax them with your purchase order to our customer service department for further processing.
For optional materials and / or feature not listed below, please consult the factory for pricing and availability

VESSEL LENGTH CODE – please check one

MODEL 80S30 ☐ -1 ☐ -2 ☐ -3 ☐ -4 ☐ -5 ☐ -6 ☐ -7 ☐ -8
Consult Sales Manager for Eight Element Housings.

MEMBRANE BRAND AND MODEL – please check one and fill in information

- ❑ Please supply adapters for the following membrane brand and specific model
  Brand_____ Model_____
- ❑ Membrane brand and model information is not currently available, but will be supplied to Pentair Water on or before the following date. ___ / ___ / ___

CERTIFICATION REQUIRED

- ❑ ASME Stamped and National Board Registered (Please consult factory for pricing)
- ❑ CE Marked
- ❑ Standard, Certified by Pentair water.

MATERIAL AND PORT CONFIGURATIONS OPTIONS – please check one
- ❑ Standard: all materials and port configurations as per drawing 99160 on the previous page
  NOTE: The options listed below will increase the vessel price. Call factory for pricing details.
- ❑ Option: Customer specified port configuration. Using the chart below, please indicate the customized options you require for each end of the pressure vessel (multiple options are available at each end).
  (Please consult factory as these options will affect pricing and vessel lead time)

PORT SIZE CODE	
D	1½" GROOVED END
E	2" GROOVED END
F	2½" GROOVED END

FEED PORT CONFIGURATION
- ❑ Standard – 1½" IPS pipe, grooved ends, with ports in-line
- ❑ Optional – Multi-Ports™
  Using the instructions in Order Specification Sheet #99007 please fill out your feed port configuration in the space below. List port location first, followed by port size for each choice.

Serial number end ☐☐☐☐☐☐☐☐☐
Opposite end ☐☐☐☐☐☐☐☐☐

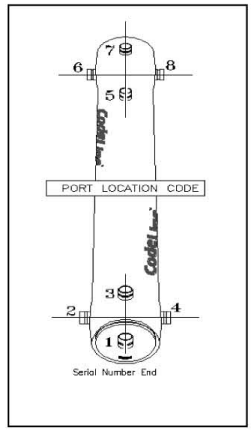

PERMEATE PORT CONFIGURATION:

- ❑ Standard 1" FNPT.
- ❑ Optional – 1.25" MNPT.

For complete information on proper use of the vessel
Please refer to the 80S Series USER'S GUIDE 94182.

 © Pentair Water

PRESSURE VESSELS CODELINE 8"-300 PSI PV 80S30NC "NO CODED" SIDE PORT

PV 80S30NC CODELINE "NO CODED"

MATERIALE DI COMPOSIZIONE:
- Vessel: _____Vetroresina
- Tappi: _____ materiale termoplastico
- Anello rapido di chiusura tappo:_____ 316 SST
- Selle (incluse): _____ materiale termoplastico (nr. 2 per vessel fino al 3 elementi, dal 4 elementi fino al 6 elementi nr. 3 per vessel).
- Tiranti (inclusi):_____in AISI 304 e cuscini in PVC (nr. 2 per vessel fino al 3 elementi, dal 4 elementi fino al 6 elementi nr. 3 per vessel).

DATI TECNICI
- Pressione di progetto: _____ 21 bar a 88°C (300 psi a 190°F)
- Temperatura minima di esercizio: _____ -7°C (20°F)
- Pressione di collaudo: _____ 31 bar (450 psi)
- Pressione di scoppio: _____ 124 bar (1800 psi)
- Uscita permeato: ___ 1" NPT femmina & 1 1/2" in PVC connessione per giunto victaulic (giunto victaulic non incluso)
- Uscita concentrato: _____ 1 1/2" in AISI 316L connessione per giunto victaulic (giunto victaulic non incluso)
- Posizione porte laterali: _____ Standard a squadro
- Colore Standard: _____Bianco
- Connettori per membrana (non inclusi):___ Tramite adapter (2 x vessel, vedi documentazione tecnica)
- Nr. di elementi disponibili: _____1-2-3-4-5-6-7

CERTIFICATI:
- Marcatura CE (su richiesta)
- Direttiva 97/23/CE (PED)
- NSF/ANSI 61
- ISO 9001:2000

APPLICAZIONI:
- Osmosi inversa;
- Ultrafiltrazione.

ACCESSORI DA ORDINARE A PARTE:
- Adapter: nr. 2 x vessel (vedi documentazione tecnica).
- Giunti Victaulic 1 1/2" VIC0001
- Sample Pro Valve (prelievo permeato): _____ CA0001

TRATTAMENTO DELLE ACQUE:
- Domestiche
- Industriali
- Municipali
- Reflue (conntattare l' Ufficio tecnico Hytek)
- di mare
- Farmaceutiche
- Alimentari

"NO CODED" CODELINE PV 80S30NC

MATERIALS COMPOSITION:
- Shell material: _____Fiberglass
- Plugs: _____ Engineering thermoplastic
- Retaining ring _____ 316 SST
- Saddles (included): _____Engineering thermoplastic (nr. 2 supports required up to 3 elements, 3 supports required for length 4 and over)
- Straps (included): _____AISI 304 and cushion in PVC (nr. 2 straps required up to 3 elements, 3 supports required for length 4 and over)

TECHNICAL SHEET:
- Design Pressure: _____ 21 bar a 88°C (300 psi at 190°F)
- Min. Operating temperature: _____ -7°C (20°F)
- Factory Test Pressure: _____ 31 bar (450 psi)
- Burst Pressure: _____ 124 bar (1800 psi)
- Permeate Port: ____ 1" NPT female & 1 1/2" in PVC connection for victaulic joint (victaulic joint not included)
- Concentrate Port: _____1 1/2" in AISI 316L connection for victaulic joint (victaulic joint not included)
- Side Port Position: _____ Standard square
- Standard color: _____ White
- Connection for membrane (not included): _____ By Adapter (2 x vessel, see technical documentation)
- Nr. elements available: _____1-2-3-4-5-6-7

CERTIFICATIONS:
- CE mark stamped (quotation on request)
- 97/23/CE Directive (PED)
- NSF/ANSI 61
- ISO 9001:2000

APPLICATIONS:
- Reverse Osmose
- Ultrafiltration.

ACCESSORIES TO BE ORDERED SEPARATELY:
- Adapter: 2 x vessel, see technical documentation
- Victaulic Joints 1 1/2" VIC0001
- Sample Pro Valve (permeate stream): _____ CA0001

WATER TREATMENTS
- Domestics
- Industrials
- Municipals
- Drains (contact Hytek Technical Office)
- Sea
- Farmaceutics
- Alimentary

www.hytekintl.com info@hytekintl.com

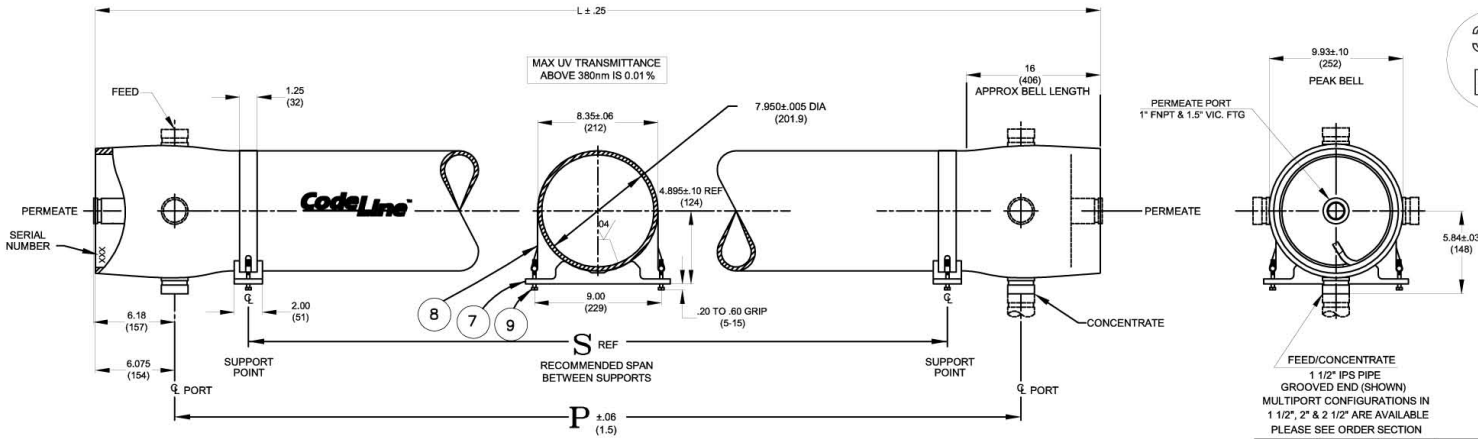

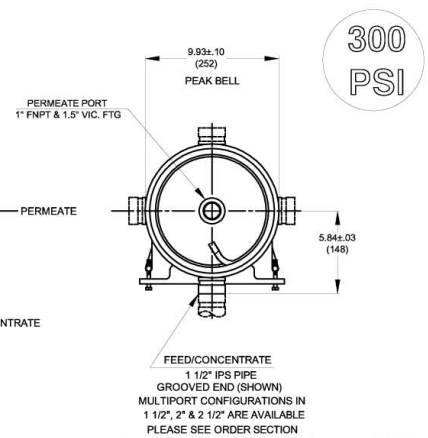

VIEW AT CENTER SUPPORT

CENTER VESSEL ON 2 OR 3 SUPPORTS AT SPAN(S) "S" : 3 SUPPORTS REQUIRED FOR LENGTHS -4 AND OVER

CAUTION: INCORRECT MANIFOLDING WILL CAUSE SEVERE LOCAL STRESS AROUND PORT AND MAY RESULT IN LEAKS AND PREMATURE FAILURE; TAKE EVERY PRECAUTION LISTED ON REVERSE, SEE INSTALLATION INSTRUCTIONS FOR FURTHER DETAILS

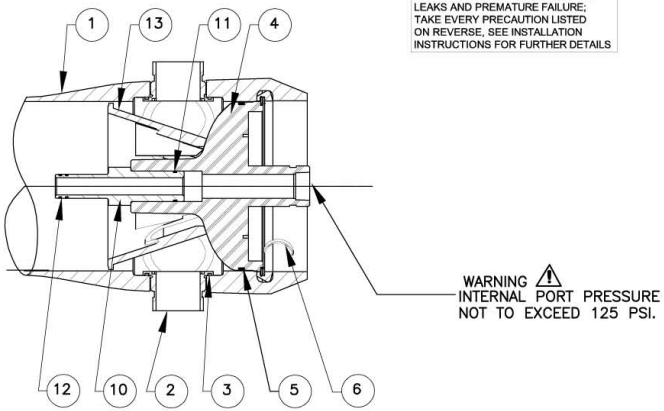

SECTION THROUGH END CLOSURE

DWG REF	QTY	PART NUMBER	DESCRIPTION	MATERIAL
SHELL				
1	1	ORDER SECTION	SHELL	Filament Wound Epoxy/Glass composites - Head locking grooves integrally wound in place.
2	A/R		F/C Port	316 L Stainless Steel / Equivalent.
3	A/R		F/C Port Seal	Ethylene Propylene .
HEAD - NON CODED				
4	2	96243	Elliptical Head Assy.	Engineering Thermoplastic.
5	2	96000	Head Seal	Ethylene Propylene - O - Ring
HEAD INTERLOCK				
6	2	47336	Quik Release Spiral Ring	316 Stainless Steel.
VESSEL SUPPORT				
7	* 2	52169	Saddle	Engineering Thermoplastic.
8	* 2	45042	Strap Assy.	304 Stainless Steel-PVC Cushion.
9	4	46265	Strap screw.	5/16-18 UNC, 18-8 Stainless Steel.
ELEMENT INTERFACE				
10	2	A/R	Adapter	Engineering Thermoplastic.
11	2	52245	Adapter seal	Ethylene Propylene - O - Ring
12	4	A/R	PWT Seal	Ethylene Propylene - O - Ring
13	1	52609	Thrust Cone	Engineering Thermoplastic.
* 3 each furnished with length code 4,5,6,7 & 8.				

Dash Length	L IN(MM)	P IN(MM)	S IN(MM)	Approx Weight LB(KG)
-1	59.15 (1502)	47 (1194)	28X1 (711)	82 (37)
-1.5	79.15 (2010)	67 (1702)	42X1 (1066)	90.5 (41)
-2	99.15 (2518)	87 (2210)	56X1 (1422)	99 (45)
-3	139.15 (3534)	127 (3226)	80X1 (2032)	117 (53)
-4	179.15 (4550)	167 (4242)	64X2 (1626)	135 (61)
-4.5	199.15 (5058)	187 (4750)	71X2 (1803)	143.5 (65)
-5	219.15 (5566)	207 (5258)	78X2 (1981)	152 (69)
-6	259.15 (6582)	247 (6274)	92X2 (2337)	170 (77)
-7	299.15 (7598)	287 (7290)	106X2 (2692)	187 (85)
-7.5	319.15 (8106)	307 (7798)	113X2 (2870)	195.5 (87)
-8	339.15 (8614)	327 (8306)	120X2 (3048)	204 (93)

NOTES:-
- MAX. ANGULAR VARIATION BETWEEN ANY PORTS ±0.5°.
- DIMENSION IN INCHES (MM APPROX.)
- SHELL EXTERIOR COATED WITH WHITE, HIGH GLOSS POLYURETHANE PAINT.
- NOT TO BE USED FOR CONSTRUCTION UNLESS CERTIFIED.
- ITEM 13 DOWNSTREAM ONLY.

CodeLine™ Pentair Water

DRAWN	KR	CODELINE - 80S30(NON-CODED) MEMBRANE HOUSING				
CHECKED	MD	DATE 05NOV07	DWG. NO. 99172			REV. D
APPROVED	RM	ECN 1104	SCALE NONE	SIZE A3	SHEET 1OF 2	

RATING:

DESIGN PRESSURE……...300 PSIG at 190°F (2.1 MPa at 88°C)
MIN. OPERATING TEMP……..……20°F (-7°C)
FACTORY TEST PRESSURE……..450 PSIG (3.1 MPa)

QUALIFICATION PRESSURE ……..…1800 PSI (12.4 MPa)

INTENDED USE:
The CodeLine 80S30 Non Coded Fiberglass RO Pressure Vessel is designed for continuous, long term use as a housing for reverse osmosis membrane elements to desalt typical brackish waters at pressures up to 300 psi. Any make of eight-inch nominal diameter spiral-wound element is easily accommodated; the appropriate interfacing hardware for the element specified is furnished with the vessel.

The Shell of CodeLine 80S30 Non Coded is designed in accordance with the engineering standards of the Boiler and Pressure Vessel Code of the American Society of Mechanical Engineers (ASME) Code.

The CodeLine 80S30 Non Coded must be installed, operated and maintained in accordance with the listed precautions and good industrial practice to assure safe operation over a long service life.

The high performance Filament wound FRP shell must be allowed to expand under pressure; undue restraint at support points or piping connections can cause leaks to develop in the shell. This side-ported vessel requires special precautions in mounting and connection to piping so that the vessel will not be subjected to excessive stress due to bending moments acting at the side openings in the fiberglass shell. The end closure, incorporating close fitting, interlocking metal components, must be kept dry and free of corrosion; deterioration can lead to catastrophic mechanical failure of the head.

Pentair Water will assist the purchaser in determining the suitability of this standard vessel for their specific operating conditions. The final determination however, including evaluation of the standard material of construction for compatibility with the specific corrosive environment, shall be the responsibility of the purchaser. Alternate materials with enhanced corrosion resistance are available on special order.

Specifications are subject to change without notice.

PRECAUTIONS:

DO…read, understand and follow all instructions; failure to take every precaution will void warranty and may result in vessel failure
DO…mount the shell on horizontal members at span "S" using compliant vessel supports furnished; tighten hold down straps just snug
DO…align and center side ports with the manifold header. Correct, causes of misalignment in a row of vessels connected to the same header
DO…use flexible type grooved-end pipe couplings, Victaulic® Style 77 or equal, at side ports; allow full, 0.125 inch gap between port and piping, and position piping to maximize flexibility of connection.
DO…provide flexibility in, and support for piping manifolds so that vessel can grow in length under pressure without undue restraint; provide additional flexible joints in large pipes leading to manifold header.
DO…provide overpressure protection for vessel set at not more than 105% of design pressure
DO…inspect end closures regularly; replace components that have deteriorated and correct causes of corrosion

DO NOT…work on any component until first verifying that pressure is relieved from vessel
DO NOT…make rigid piping connections to ports or clamp vessel in any way that resists growth of fiberglass shell under pressure;
***ΔDIA = 0.015 in. (0.4mm) and
***ΔL = 0.2 in. (6mm) for a length code –8 vessel
DO NOT… hang piping manifolds from ports or use vessel in any way to support other components
DO NOT…tighten Permeate Port connection more than one turn past hand tight
DO NOT… operate vessel without connecting both Permeate Ports internally to complete set of elements or otherwise plug ports internally so that external piping connection is not subjected to feed pressure
DO NOT…install Spacer on downstream end of vessel
DO NOT…operate vessel without Thrust Cone installed downstream
DO NOT…pressurize vessel until double-checking to verify that the Locking Ring is in place and fully seated.
DO NOT…operate vessel at pressure and temperature in excess of its rating.
DO NOT…operate vessel with permeate pressure in excess of 125 psi at 190°F (0.86 Mpa at 88.^{0}C).
DO NOT…tolerate leaks or allow end closures to be routinely wetted in any way
DO NOT…operate outside the pH range 3-10.

ORDERING:
Using the chart below, please check the features you require and fax them with your purchase order to our customer service department for further processing.
For optional materials and / or feature not listed below, please consult the factory for pricing and availability

VESSEL LENGTH CODE – please check one

MODEL 80S30 Non Coded ☐ -1 ☐ -1.5 ☐ -2 ☐ -3 ☐ -4 ☐ -4.5 ☐ -5 ☐ -6 ☐ -7 ☐ -7.5 ☐ -8
Consult Sales Manager for Eight Element Housings.

MEMBRANE BRAND AND MODEL – please check one and fill in information

- ❑ Please supply adapters for the following membrane brand and specific model
  Brand_____ Model_____
- ❑ Membrane brand and model information is not currently available, but will be supplied to Pentair Water on or before the following date. ___ / ___ / ___

CERTIFICATION REQUIRED

- ❑ CE Marked
- ❑ Standard, Certified by Pentair water.

MATERIAL AND PORT CONFIGURATIONS OPTIONS – please check one
- ❑ Standard: all materials and port configurations as per drawing 99172 on the previous page
  NOTE: The options listed below will increase the vessel price. Call factory for pricing details.
- ❑ Option: Customer specified port configuration. Using the chart below, please indicate the customized options you require for each end of the pressure vessel (multiple options are available at each end).
  (Please consult factory as these options will affect pricing and vessel lead time)

PORT SIZE CODE	
D	1½" GROOVED END
E	2" GROOVED END
F	2½" GROOVED END

FEED PORT CONFIGURATION
- ❑ Standard – 1½" IPS pipe, grooved ends, with ports in-line
- ❑ Optional – Multi-Ports ™

Using the instructions in Order Specification Sheet #99007 please fill out your feed port configuration in the space below. List port location first, followed by port size for each choice.

Serial number end ☐ ☐ ☐ ☐ ☐ ☐ ☐ ☐ ☐
Opposite end ☐ ☐ ☐ ☐ ☐ ☐ ☐ ☐ ☐

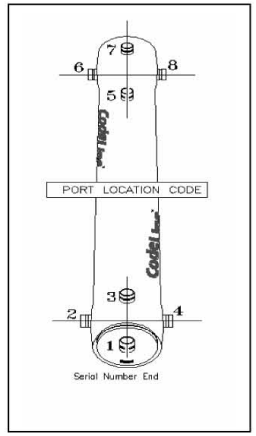

PERMEATE PORT CONFIGURATION:

- ❑ Standard. 1" FNPT & 1.5" VICTUALIC.
- ❑ Optional. 1" BIS F/JIS F-Parallel Thread &1.5"VIC.

For complete information on proper use of the vessel
Please refer to the 80S Series USER'S GUIDE 94182.

PRESSURE VESSELS CODELINE 8"-450 PSI PV 80S45 "CODED" SIDE PORT

PV 80S45 CODELINE "CODED"

MATERIALE DI COMPOSIZIONE:
- Vessel: _____Vetroresina
- Tappi: _____Lega di alluminio 6061-T6
- Anello di chiusura tappo:_____ 316 SST
- Basamento tappo: _____ materiale termoplastico
- Selle (incluse): _____ materiale termoplastico (nr. 2 per vessel fino al 3 elementi, dal 4 elementi fino al 6 elementi nr. 3 per vessel).
- Tiranti (inclusi):_____in AISI 304 e cuscini in PVC (nr. 2 per vessel fino al 3 elementi, dal 4 elementi fino al 6 elementi nr. 3 per vessel).

DATI TECNICI
- Pressione di progetto: _____ 31 bar a 88°C (450 psi a 190°F)
- Temperatura minima di esercizio: _____ -7°C (20°F)
- Pressione di collaudo:
• ASME 40 bar (585 psi)
• CE 46 bar (675 psi)
- Pressione di scoppio: _____ 186 bar (2700 psi)
- Uscita permeato: _____ 1" NPT femmina
- Uscita concentrato: _____ 1 1/2" in AISI 316L connessione per giunto victaulic (giunto victaulic non incluso)
- Posizione porte laterali: _____ Standard a squadro
- Colore Standard: _____Bianco
- Connettori per membrana (non inclusi):___ Tramite adapter (2 x vessel, vedi documentazione tecnica)
- Nr. di elementi disponibili: _____1-2-3-4-5-6-7

CERTIFICATI:
- Ispezione e marcatura ASME CODE (quotazione su richiesta)
- Marcatura CE (quotazione su richiesta)
- Direttiva 97/23/CE (PED)
- NSF/ANSI 61
- ISO 9001:2000

APPLICAZIONI:
- Osmosi inversa;
- Ultrafiltrazione.

ACCESSORI DA ORDINARE A PARTE:
- Adapter: nr. 2 x vessel (vedi documentazione tecnica).
- Giunti Victaulic 1 1/2" VIC0001
- Sample Pro Valve (prelievo permeato): _____ CA0001

TRATTAMENTO DELLE ACQUE:
- Domestiche
- Industriali
- Municipali
- Reflue (conntattare l' Ufficio tecnico Hytek)
- di mare
- Farmaceutiche
- Alimentari

"CODED" CODELINE PV 80S45

MATERIALS COMPOSITION:
- Shell material: _____Fiberglass
- Plugs: _____ 6061-T6 Hard anodized Alum. alloy
- Retaining ring _____ 316 SST
- Bearing ring _____ Engineering thermoplastic
- Saddles (included): _____Engineering thermoplastic (nr. 2 supports required up to 3 elements, 3 supports required for length 4 and over)
- Straps (included): _____AISI 304 and cushion in PVC (nr. 2 straps required up to 3 elements, 3 supports required for length 4 and over)

TECHNICAL SHEET:
- Design Pressure: _____ 31 bar a 88°C (450 psi at 190°F)
- Min. Operating temperature: _____ -7°C (20°F)
- Factory Test Pressure:
• ASME 40 bar (585 psi)
• CE 46 bar (675 psi)
- Burst Pressure: _____ 186 bar (2700 psi)
-Permeate Port: _____ 1" NPT female
- Concentrate Port: _____1 1/2" in AISI 316L connection for victaulic joint (victaulic joint not included)
- Side Port Position: _____Standard square
- Standard color: _____ White
- Connection for membrane (not included): _____ By Adapter (2 x vessel, see technical documentation)
- Nr. elements available: _____1-2-3-4-5-6-7

CERTIFICATIONS:
- Inspection and ASME CODE stamped (quotation on request)
- CE mark stamped (quotation on request)
- 97/23/CE Directive (PED)
- NSF/ANSI 61
- ISO 9001:2000

APPLICATIONS:
- Reverse Osmose
- Ultrafiltration.

ACCESSORIES TO BE ORDERED SEPARATELY:
- Adapter: 2 x vessel, see technical documentation
- Victaulic Joints 1 1/2" VIC0001
- Sample Pro Valve (permeate stream): _____ CA0001

WATER TREATMENTS
- Domestics
- Industrials
- Municipals
- Drains (contact Hytek Technical Office)
- Sea
- Farmaceutics
- Alimentary

www.hytekintl.com info@hytekintl.com

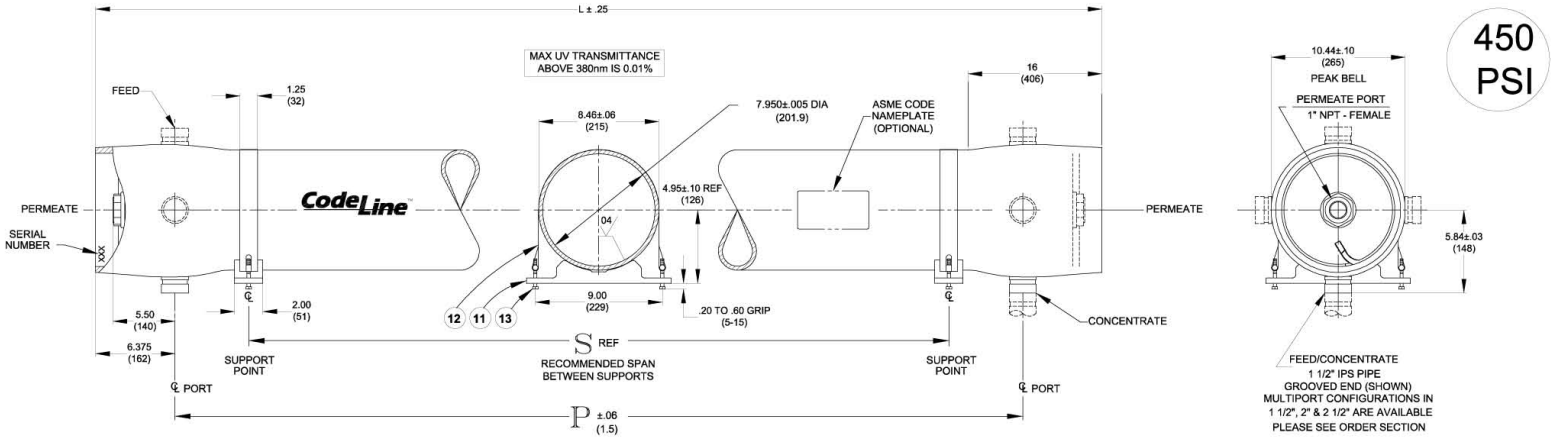

450 PSI

VIEW AT CENTER SUPPORT

CENTER VESSEL ON 2 OR 3 SUPPORTS AT SPAN(S) "S" : 3 SUPPORTS REQUIRED FOR LENGTHS -4 AND OVER

CAUTION: INCORRECT MANIFOLDING WILL CAUSE SEVERE LOCAL STRESS AROUND PORT AND MAY RESULT IN LEAKS AND PREMATURE FAILURE; TAKE EVERY PRECAUTION LISTED ON REVERSE, SEE INSTALLATION INSTRUCTIONS FOR FURTHER DETAILS

DWG REF	QTY	PART NUMBER	DESCRIPTION	MATERIAL
SHELL				
1	1	ORDER SECTION	SHELL	Filament Wound Epoxy/Glass composites - Head locking grooves integrally wound in place.
2	A/R		F/C Port	316 L Stainless Steel / Equivalent.
3	A/R		F/C Port Seal	Ethylene Propylene.
HEAD				
4	2	96157	Bearing Plate	6061-T6 Aluminium alloy - Hard anodized
5	2	96160	Sealing Plate	Engineering Thermoplastic.
6	2	96162	Permeate Port	Engineering Thermoplastic.
7	2	45066	Port Nut	Engineering Thermoplastic.
8	2	96000	Head Seal	Ethylene Propylene - O - Ring
9	2	45312	Perm Port Seal	Ethylene Propylene - O - Ring
HEAD INTERLOCK				
10	2	47336	QuikRelease Spiral Ring	316 Stainless Steel.
VESSEL SUPPORT				
11	* 2	52169	Saddle	Engineering Thermoplastic.
12	* 2	45042	Strap Assy.	304 Stainless Steel-PVC Cushion.
13	4	46265	Strap screw.	5/16-18 UNC, 18-8 Stainless Steel.
ELEMENT INTERFACE				
14	2	A/R	Adapter	Engineering Thermoplastic.
15	2	52245	Adapter seal	Ethylene Propylene - O - Ring
16	4	A/R	PWT Seal	Ethylene Propylene - O - Ring
17	1	96163	Thrust Cone	Engineering Thermoplastic.
* 3 each furnished with length code 4,5,6,7 & 8.				

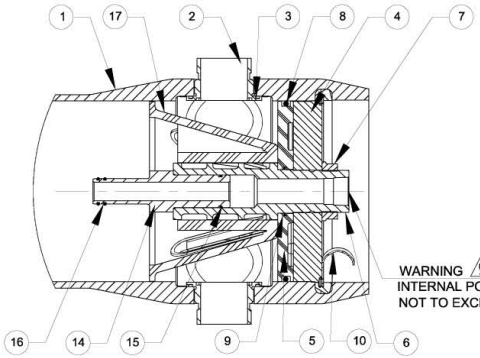

SECTION THROUGH END CLOSURE

WARNING ⚠
INTERNAL PORT PRESSURE
NOT TO EXCEED 125 PSI

Dash Length	L IN(MM)	P IN(MM)	S IN(MM)	Approx Weight LB(KG)
-1	59.75 (1518)	47 (1194)	25X1 (635)	82 (37)
-2	99.75 (2534)	87 (2210)	56X1 (1422)	101 (46)
-3	139.75 (3550)	127 (3226)	80X1 (2032)	121 (55)
-4	179.75 (4566)	167 (4242)	64X2 (1626)	141 (64)
-5	219.75 (5582)	207 (5258)	78X2 (1981)	161 (73)
-6	259.75 (6598)	247 (6274)	92X2 (2337)	181 (82)
-7	299.75 (7614)	287 (7290)	106X2 (2692)	201 (91)
# -8	339.75 (8630)	327 (8306)	120X2 (3048)	220 (100)

NOTES:-
- MAX. ANGULAR VARIATION BETWEEN ANY PORTS ±0.5°.
- DIMENSION IN INCHES (MM APPROX.)
- SHELL EXTERIOR COATED WITH WHITE, HIGH GLOSS POLYURETHANE PAINT.
- NOT TO BE USED FOR CONSTRUCTION UNLESS CERTIFIED.
- ITEM 17 DOWNSTREAM ONLY.

CodeLine™ Pentair Water

DRAWN	PGS	CODELINE - 80S45 MEMBRANE HOUSING			
CHECKED	MD	DATE 14NOV06	DWG. NO. 99161		REV. B
APPROVED	PSC	ECN 978	SCALE NONE	SIZE A3	SHEET 1OF 2

RATING:

DESIGN PRESSURE……..450 PSIG at 190°F (3.1 MPa at 88°C)
MIN. OPERATING TEMP……..……..20°F (-7°C)
FACTORY TEST PRESSURE…….CE / ASME
675 PSIG / 495 PSIG
(4.65 MPa) (3.41 MPa)
QUALIFICATION PRESSURE……...2700 PSI (18.62 MPa)

INTENDED USE:

The CodeLine 80S45 Fiberglass RO Pressure Vessel is designed for continuous, long term use as a housing for reverse osmosis membrane elements to desalt typical brackish waters at pressures up to 450 psi. Any make of eight-inch nominal diameter spiral-wound element is easily accommodated; the appropriate interfacing hardware for the element specified is furnished with the vessel.

The CodeLine 80S45 is designed in accordance with the engineering standards of the Boiler and Pressure Vessel Code of the American Society of Mechanical Engineers (ASME) Code. At small additional cost vessels can be inspected during construction by an ASME Authorized Inspector and ASME Code stamped.

The CodeLine 80S45 must be installed, operated and maintained in accordance with the listed precautions and good industrial practice to assure safe operation over a long service life.

The high performance Filament wound FRP shell must be allowed to expand under pressure; undue restraint at support points or piping connections can cause leaks to develop in the shell. This side-ported vessel requires special precautions in mounting and connection to piping so that the vessel will not be subjected to excessive stress due to bending moments acting at the side openings in the fiberglass shell. The end closure, incorporating close fitting, interlocking metal components, must be kept dry and free of corrosion; deterioration can lead to catastrophic mechanical failure of the head.

Pentair Water will assist the purchaser in determining the suitability of this standard vessel for their specific operating conditions. The final determination however, including evaluation of the standard material of construction for compatibility with the specific corrosive environment, shall be the responsibility of the purchaser. Alternate materials with enhanced corrosion resistance are available on special order.

Specifications are subject to change without notice.

PRECAUTIONS:

DO…read, understand and follow all instructions; failure to take every precaution will void warranty and may result in vessel failure
DO…mount the shell on horizontal members at span "S" using compliant vessel supports furnished; tighten hold down straps just snug
DO…align and center side ports with the manifold header. Correct, causes of misalignment in a row of vessels connected to the same header
DO…use flexible type grooved-end pipe couplings, Victaulic® Style 77 or equal, at side ports; allow full, 0.125 inch gap between port and piping, and position piping to maximize flexibility of connection.
DO…provide flexibility in, and support for piping manifolds so that vessel can grow in length under pressure without undue restraint; provide additional flexible joints in large pipes leading to manifold header.
DO…provide overpressure protection for vessel set at not more than 105% of design pressure
DO…inspect end closures regularly; replace components that have deteriorated and correct causes of corrosion

DO NOT…work on any component until first verifying that pressure is relieved from vessel
DO NOT…make rigid piping connections to ports or clamp vessel in any way that resists growth of fiberglass shell under pressure;
***ΔDIA = 0.015 in. (0.4mm) and
***ΔL = 0.2 in. (6mm) for a length code –8 vessel
DO NOT… hang piping manifolds from ports or use vessel in any way to support other components
DO NOT…tighten Permeate Port connection more than one turn past hand tight
DO NOT… operate vessel without connecting both Permeate Ports internally to complete set of elements or otherwise plug ports internally so that external piping connection is not subjected to feed pressure
DO NOT…install Spacer on downstream end of vessel
DO NOT…operate vessel without Thrust Cone installed downstream
DO NOT…pressurize vessel until double-checking to verify that the Locking Ring is in place and fully seated.
DO NOT…operate vessel at pressure and temperature in excess of its rating.
DO NOT…operate vessel with permeate pressure in excess of 125 psi at 190°F (0.86 MPa at 88^{0}C).
DO NOT…tolerate leaks or allow end closures to be routinely wetted in any way
DO NOT…operate outside the pH range 3-10.

ORDERING:
Using the chart below, please check the features you require and fax them with your purchase order to our customer service department for further processing.
For optional materials and features not listed below, please consult the factory for pricing and availability

VESSEL LENGTH CODE – please check one

MODEL OCTA 80S45 ☐ -1 ☐ -2 ☐ -3 ☐ -4 ☐ -5 ☐ -6 ☐ -7 ☐ -8
Consult Sales Manager for Eight Element Housings.

MEMBRANE BRAND AND MODEL – please check one and fill in information

- ❑ Please supply adapters for the following membrane brand and specific model
  Brand_____ Model_____
- ❑ Membrane brand and model information is not currently available, but will be supplied to Pentair Water on or before the following date. ___ / ___ / ___

CERTIFICATION REQUIRED

- ❑ ASME Stamped and National Board Registered (please consult factory for pricing)
- ❑ CE Marked
- ❑ Standard, Certified by Pentair water.

MATERIAL AND PORT CONFIGURATIONS OPTIONS – please check one
- ❑ Standard: all materials and port configurations as per drawing 99161 on the previous page
  NOTE: The options listed below will increase the vessel price. Call factory for pricing details.
- ❑ Option: Customer specified port configuration. Using the chart below, please indicate the customized options you require for each end of the pressure vessel (multiple options are available at each end).
  (Please consult factory as these options will affect pricing and vessel lead time)

FEED PORT CONFIGURATION
- ❑ Standard – 1½" IPS pipe, grooved ends, with ports in-line
- ❑ Optional – Multi-Ports™
  Using the instructions in Order Specification Sheet #99007 please fill out your feed port configuration in the space below. List port location first, followed by port size for each choice. 2.5" Ports not available in 90° Configuration.

Serial number end ☐ ☐ ☐ ☐ ☐ ☐ ☐ ☐
Opposite end ☐ ☐ ☐ ☐ ☐ ☐ ☐ ☐

PORT SIZE CODE	
D	1½" GROOVED END
E	2" GROOVED END
F	2½" GROOVED END

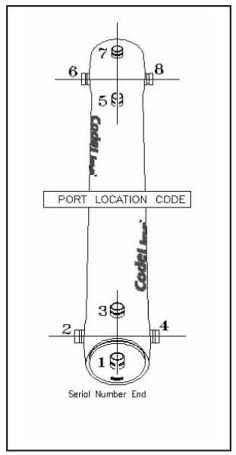

PERMEATE PORT CONFIGURATION:

- ❑ Standard 1" FNPT.
- ❑ Optional – 1.25" MNPT.

For complete information on proper use of the vessel
Please refer to the 80S Series USER'S GUIDE 94182.

PRESSURE VESSELS CODELINE 8"-450 PSI PV 80S45NC "NO CODED" SIDE PORT

PV 80S45NC CODELINE "NO CODED"

MATERIALE DI COMPOSIZIONE:
- Vessel: _____Vetroresina
- Tappi: _____ materiale termoplastico
- Anello rapido di chiusura tappo:_____ 316 SST
- Selle (incluse): _____ materiale termoplastico (nr. 2 per vessel fino al 3 elementi, dal 4 elementi fino al 6 elementi nr. 3 per vessel).
- Tiranti (inclusi):_____in AISI 304 e cuscini in PVC (nr. 2 per vessel fino al 3 elementi, dal 4 elementi fino al 6 elementi nr. 3 per vessel).

DATI TECNICI
- Pressione di progetto: _____ 31 bar a 88°C (450 psi a 190°F)
- Temperatura minima di esercizio: _____ -7°C (20°F)
- Pressione di collaudo: _____ 46 bar (675 psi)
- Pressione di scoppio: _____ 186 bar (2700 psi)
- Uscita permeato: ___ 1" NPT femmina & 1 1/2" in PVC connessione per giunto victaulic (giunto victaulic non incluso)
- Uscita concentrato: _____ 1 1/2" in AISI 316L connessione per giunto victaulic (giunto victaulic non incluso)
- Posizione porte laterali: _____ Standard a squadro
- Colore Standard: _____Bianco
- Connettori per membrana (non inclusi):___ Tramite adapter (2 x vessel, vedi documentazione tecnica)
- Nr. di elementi disponibili: _____1-2-3-4-5-6-7

CERTIFICATI:
- Marcatura CE (su richiesta)
- Direttiva 97/23/CE (PED)
- NSF/ANSI 61
- ISO 9001:2000

APPLICAZIONI:
- Osmosi inversa;
- Ultrafiltrazione.

ACCESSORI DA ORDINARE A PARTE:
- Adapter: nr. 2 x vessel (vedi documentazione tecnica).
- Giunti Victaulic 1 1/2" VIC0001
- Sample Pro Valve (prelievo permeato): _____ CA0001

TRATTAMENTO DELLE ACQUE:
- Domestiche
- Industriali
- Municipali
- Reflue (conntattare l' Ufficio tecnico Hytek)
- di mare
- Farmaceutiche
- Alimentari

"NO CODED" CODELINE PV 80S45NC

MATERIALS COMPOSITION:
- Shell material: _____Fiberglass
- Plugs: _____ Engineering thermoplastic
- Retaining ring _____ 316 SST
- Saddles (included): _____Engineering thermoplastic (nr. 2 supports required up to 3 elements, 3 supports required for length 4 and over)
- Straps (included): _____AISI 304 and cushion in PVC (nr. 2 straps required up to 3 elements, 3 supports required for length 4 and over)

TECHNICAL SHEET:
- Design Pressure: _____ 31 bar a 88°C (450 psi at 190°F)
- Min. Operating temperature: _____ -7°C (20°F)
- Factory Test Pressure: _____ 46 bar (675 psi)
- Burst Pressure: _____ 124 bar (2700 psi)
- Permeate Port: ____ 1" NPT female & 1 1/2" in PVC connection for victaulic joint (victaulic joint not included)
- Concentrate Port: _____1 1/2" in AISI 316L connection for victaulic joint (victaulic joint not included)
- Side Port Position: _____ Standard square
- Standard color: _____ White
- Connection for membrane (not included): _____ By Adapter (2 x vessel, see technical documentation)
- Nr. elements available: _____1-2-3-4-5-6-7

CERTIFICATIONS:
- CE mark stamped (quotation on request)
- 97/23/CE Directive (PED)
- NSF/ANSI 61
- ISO 9001:2000

APPLICATIONS:
- Reverse Osmose
- Ultrafiltration.

ACCESSORIES TO BE ORDERED SEPARATELY:
- Adapter: 2 x vessel, see technical documentation
- Victaulic Joints 1 1/2" VIC0001
- Sample Pro Valve (permeate stream): _____ CA0001

WATER TREATMENTS
- Domestics
- Industrials
- Municipals
- Drains (contact Hytek Technical Office)
- Sea
- Farmaceutics
- Alimentary

www.hytekintl.com info@hytekintl.com

Codeline

hytek hydrotechnologies

DISEGNO TECNICO PV 80S45NC CODELINE "NO CODED / "NO CODED" CODELINE
PV80S45NC TECHNICAL DRAW

PV 80S45 NC

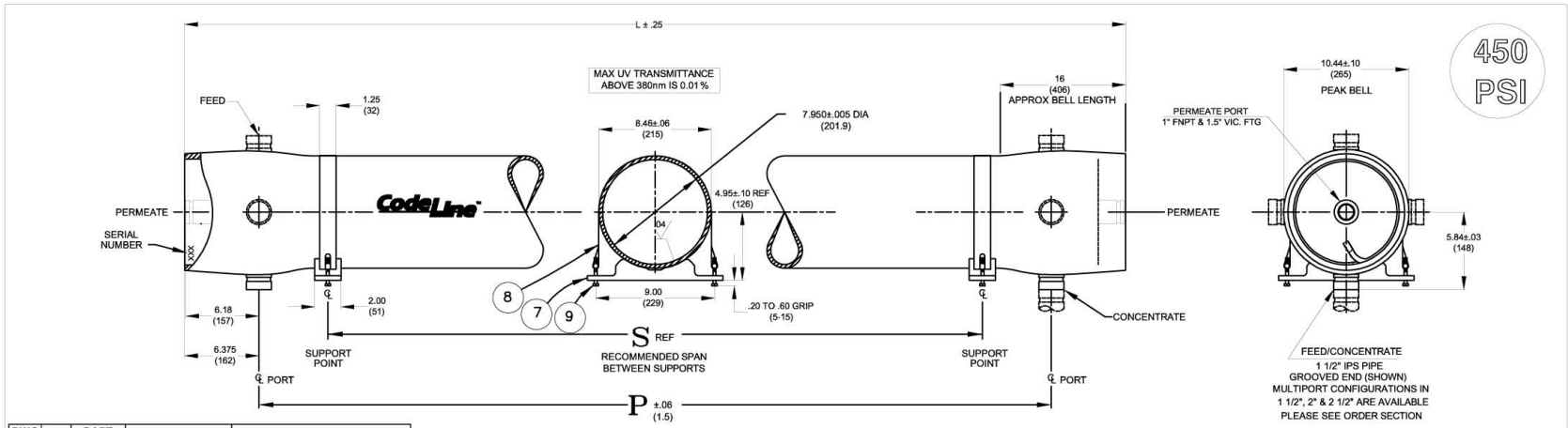

DWG REF	QTY	PART NUMBER	DESCRIPTION	MATERIAL
SHELL				
1	1	ORDER SECTION	SHELL	Filament Wound Epoxy/Glass composites - Head locking grooves integrally wound in place.
2	A/R		F/C Port	316 L Stainless Steel / Equivalent.
3	A/R		F/C Port Seal	Ethylene Propylene .
HEAD - NON CODED				
4	2	96248	Elliptical Head Assy.	Engineering Thermoplastic.
5	2	96000	Head Seal	Ethylene Propylene - O - Ring
HEAD INTERLOCK				
6	2	47336	Quik Release Spiral Ring	316 Stainless Steel.
VESSEL SUPPORT				
7	* 2	52169	Saddle	Engineering Thermoplastic.
8	* 2	45042	Strap Assy.	304 Stainless Steel-PVC Cushion.
9	4	46265	Strap screw.	5/16-18 UNC, 18-8 Stainless Steel.
ELEMENT INTERFACE				
10	2	A/R	Adapter	Engineering Thermoplastic.
11	2	52245	Adapter seal	Ethylene Propylene - O - Ring
12	4	A/R	PWT Seal	Ethylene Propylene - O - Ring
13	1	52609	Thrust Cone	Engineering Thermoplastic.
* 3 each furnished with length code 4,5,6,7 & 8.				

VIEW AT CENTER SUPPORT

CENTER VESSEL ON 2 OR 3 SUPPORTS AT SPAN(S) "S" : 3 SUPPORTS REQUIRED FOR LENGTHS -4 AND OVER

CAUTION: INCORRECT MANIFOLDING WILL CAUSE SEVERE LOCAL STRESS AROUND PORT AND MAY RESULT IN LEAKS AND PREMATURE FAILURE; TAKE EVERY PRECAUTION LISTED ON REVERSE, SEE INSTALLATION INSTRUCTIONS FOR FURTHER DETAILS

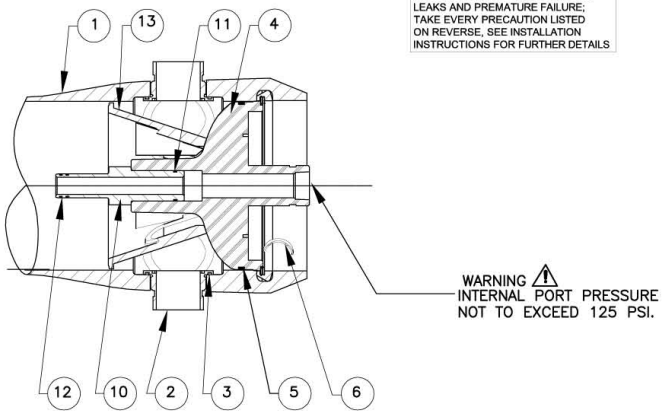

SECTION THROUGH END CLOSURE

Dash Length	L IN(MM)	P IN(MM)	S IN(MM)	Approx Weight LB(KG)
-1	59.75 (1518)	47 (1194)	25X1 (711)	75 (34)
-2	99.75 (2534)	87 (2210)	56X1 (1422)	95 (43)
-3	139.75 (3550)	127 (3226)	80X1 (2032)	115 (52)
-4	179.75 (4566)	167 (4242)	64X2 (1626)	134 (61)
-5	219.75 (5582)	207 (5258)	78X2 (1981)	154 (70)
-6	259.75 (6598)	247 (6274)	92X2 (2337)	174 (79)
-7	299.75 (7614)	287 (7290)	106X2 (2692)	194 (88)
# -8	339.75 (8630)	327 (8306)	120X2 (3048)	214 (97)

NOTES:-
- MAX. ANGULAR VARIATION BETWEEN ANY PORTS ±0.5°.
- DIMENSION IN INCHES (MM APPROX.)
- SHELL EXTERIOR COATED WITH WHITE, HIGH GLOSS POLYURETHANE PAINT.
- NOT TO BE USED FOR CONSTRUCTION UNLESS CERTIFIED.
- ITEM 13 DOWNSTREAM ONLY.

CodeLine™ Pentair Water

DRAWN	KR	CODELINE - 80S45(NON-CODED) MEMBRANE HOUSING				
CHECKED	MD	DATE 27DEC07	DWG. NO. 99173			REV. C
APPROVED	SS	ECN 1153	SCALE NONE	SIZE A3	SHEET 1OF 2	

RATING:

DESIGN PRESSURE……...450 PSIG at 190°F (3.1 MPa at 88°C)
MIN. OPERATING TEMP……...……20°F (-7°C)
FACTORY TEST PRESSURE……675 PSIG (4.65 MPa)

QUALIFICATION PRESSURE……,,..2700 PSI (18.62 MPa)

INTENDED USE:

The CodeLine 80S45 Non Coded Fiberglass RO Pressure Vessel is designed for continuous, long term use as a housing for reverse osmosis membrane elements to desalt typical brackish waters at pressures up to 450 psi. Any make of eight-inch nominal diameter spiral-wound element is easily accommodated; the appropriate interfacing hardware for the element specified is furnished with the vessel.

The Shell of CodeLine 80S45 Non Coded is designed in accordance with the engineering standards of the Boiler and Pressure Vessel Code of the American Society of Mechanical Engineers (ASME) Code.

The CodeLine 80S45 Non Coded must be installed, operated and maintained in accordance with the listed precautions and good industrial practice to assure safe operation over a long service life.

The high performance Filament wound FRP shell must be allowed to expand under pressure; undue restraint at support points or piping connections can cause leaks to develop in the shell. This side-ported vessel requires special precautions in mounting and connection to piping so that the vessel will not be subjected to excessive stress due to bending moments acting at the side openings in the fiberglass shell. The end closure, incorporating close fitting, interlocking metal components, must be kept dry and free of corrosion; deterioration can lead to catastrophic mechanical failure of the head.

Pentair Water will assist the purchaser in determining the suitability of this standard vessel for their specific operating conditions. The final determination however, including evaluation of the standard material of construction for compatibility with the specific corrosive environment, shall be the responsibility of the purchaser. Alternate materials with enhanced corrosion resistance are available on special order.

Specifications are subject to change without notice.

PRECAUTIONS:

DO…read, understand and follow all instructions; failure to take every precaution will void warranty and may result in vessel failure
DO…mount the shell on horizontal members at span "S" using compliant vessel supports furnished; tighten hold down straps just snug
DO…align and center side ports with the manifold header. Correct, causes of misalignment in a row of vessels connected to the same header
DO…use flexible type grooved-end pipe couplings, Victaulic® Style 77 or equal, at side ports; allow full, 0.125 inch gap between port and piping, and position piping to maximize flexibility of connection.
DO…provide flexibility in, and support for piping manifolds so that vessel can grow in length under pressure without undue restraint; provide additional flexible joints in large pipes leading to manifold header.
DO…provide overpressure protection for vessel set at not more than 105% of design pressure
DO…inspect end closures regularly; replace components that have deteriorated and correct causes of corrosion

DO NOT…work on any component until first verifying that pressure is relieved from vessel
DO NOT…make rigid piping connections to ports or clamp vessel in any way that resists growth of fiberglass shell under pressure;
***ΔDIA = 0.015 in. (0.4mm) and
***ΔL = 0.2 in. (6mm) for a length code –8 vessel
DO NOT… hang piping manifolds from ports or use vessel in any way to support other components
DO NOT…tighten Permeate Port connection more than one turn past hand tight
DO NOT… operate vessel without connecting both Permeate Ports internally to complete set of elements or otherwise plug ports internally so that external piping connection is not subjected to feed pressure
DO NOT…install Spacer on downstream end of vessel
DO NOT…operate vessel without Thrust Cone installed downstream
DO NOT…pressurize vessel until double-checking to verify that the Locking Ring is in place and fully seated.
DO NOT…operate vessel at pressure and temperature in excess of its rating.
DO NOT…operate vessel with permeate pressure in excess of 125 psi at 190°F (0.86 MPa at 88°C).
DO NOT…tolerate leaks or allow end closures to be routinely wetted in any way
DO NOT…operate outside the pH range 3-10.

ORDERING:
Using the chart below, please check the features you require and fax them with your purchase order to our customer service department for further processing.
For optional materials and / or feature not listed below, please consult the factory for pricing and availability

VESSEL LENGTH CODE – please check one

MODEL 80S45 Non Coded ☐ -1 ☐ -2 ☐ -3 ☐ -4 ☐ -5 ☐ -6 ☐ -7 ☐ -8
Consult Sales Manager for Eight Element Housings.

MEMBRANE BRAND AND MODEL – please check one and fill in information

- ❑ Please supply adapters for the following membrane brand and specific model
  Brand_____ Model_____
- ❑ Membrane brand and model information is not currently available, but will be supplied to Pentair Water on or before the following date. ___ / ___ / ___

CERTIFICATION REQUIRED

- ❑ CE Marked
- ❑ Standard, Certified by Pentair water.

MATERIAL AND PORT CONFIGURATIONS OPTIONS – please check one
- ❑ Standard: all materials and port configurations as per drawing 99173 on the previous page
  NOTE: The options listed below will increase the vessel price. Call factory for pricing details.
- ❑ Option: Customer specified port configuration. Using the chart below, please indicate the customized options you require for each end of the pressure vessel (multiple options are available at each end).
  (Please consult factory as these options will affect pricing and vessel lead time)

FEED PORT CONFIGURATION
- ❑ Standard – 1½" IPS pipe, grooved ends, with ports in-line
- ❑ Optional – Multi-Ports™

Using the instructions in Order Specification Sheet #99007 please fill out your feed port configuration in the space below. List port location first, followed by port size for each choice.

Serial number end ☐☐☐☐☐☐☐☐
Opposite end ☐☐☐☐☐☐☐☐

PERMEATE PORT CONFIGURATION:

- ❑ Standard. 1" FNPT & 1.5" VICTUALIC.
- ❑ Optional. 1"BSP F/JIS F-Parallel Thread & 1.5"VIC

PORT SIZE CODE	
D	1½" GROOVED END
E	2" GROOVED END
F	2½" GROOVED END

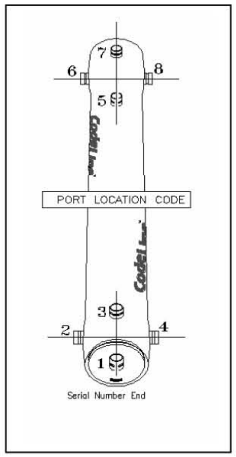

For complete information on proper use of the vessel
Please refer to the 80S Series USER'S GUIDE 94182.

PRESSURE VESSELS CODELINE 8"-600 PSI PV 80S60 "CODED" SIDE PORT

PV 80S60 CODELINE "CODED"

MATERIALE DI COMPOSIZIONE:
- Vessel: _____Vetroresina
- Tappi: _____Lega di alluminio 6061-T6
- Anello di chiusura tappo:_____ 316 SST
- Basamento tappo: _____ materiale termoplastico
- Selle (incluse): _____ materiale termoplastico (nr. 2 per vessel fino al 3 elementi, dal 4 elementi fino al 6 elementi nr. 3 per vessel).
- Tiranti (inclusi):_____in AISI 304 e cuscini in PVC (nr. 2 per vessel fino al 3 elementi, dal 4 elementi fino al 6 elementi nr. 3 per vessel).

DATI TECNICI
- Pressione di progetto: _____ 41 bar a 88°C (600 psi a 190°F)
- Temperatura minima di esercizio: _____ -7°C (20°F)
- Pressione di collaudo:
• ASME 54 bar (780 psi)
• CE 62 bar (900 psi)
- Pressione di scoppio: _____ 248 bar (3600 psi)
- Uscita permeato: _____ 1" NPT femmina
- Uscita concentrato: _____ 1 1/2" in AISI 316L connessione per giunto victaulic (giunto victaulic non incluso)
- Posizione porte laterali: _____ Standard a squadro
- Colore Standard: _____Bianco
- Connettori per membrana (non inclusi):___ Tramite adapter (2 x vessel, vedi documentazione tecnica)
- Nr. di elementi disponibili: _____1-2-3-4-5-6-7

CERTIFICATI:
- Ispezione e marcatura ASME CODE (quotazione su richiesta)
- Marcatura CE (quotazione su richiesta)
- Direttiva 97/23/CE (PED)
- NSF/ANSI 61
- ISO 9001:2000

APPLICAZIONI:
- Osmosi inversa;
- Ultrafiltrazione.

ACCESSORI DA ORDINARE A PARTE:
- Adapter: nr. 2 x vessel (vedi documentazione tecnica).
- Giunti Victaulic 1 1/2" VIC0001
- Sample Pro Valve (prelievo permeato): _____ CA0001

TRATTAMENTO DELLE ACQUE:
- Domestiche
- Industriali
- Municipali
- Reflue (conntattare l' Ufficio tecnico Hytek)
- di mare
- Farmaceutiche
- Alimentari

"CODED" CODELINE PV 80S60

MATERIALS COMPOSITION:
- Shell material: _____Fiberglass
- Plugs: _____ 6061-T6 Hard anodized Alum. alloy
- Retaining ring _____ 316 SST
- Bearing ring _____ Engineering thermoplastic
- Saddles (included): _____Engineering thermoplastic (nr. 2 supports required up to 3 elements, 3 supports required for length 4 and over)
- Straps (included): _____AISI 304 and cushion in PVC (nr. 2 straps required up to 3 elements, 3 supports required for length 4 and over)

TECHNICAL SHEET:
- Design Pressure: _____ 41 bar a 88°C (600 psi at 190°F)
- Min. Operating temperature: _____ -7°C (20°F)
- Factory Test Pressure:
• ASME 54 bar (780 psi)
• CE 62 bar (900 psi)
- Burst Pressure: _____ 248 bar (3600 psi)
-Permeate Port: _____ 1" NPT female
- Concentrate Port: _____1 1/2" in AISI 316L connection for victaulic joint (victaulic joint not included)
- Side Port Position: _____Standard square
- Standard color: _____ White
- Connection for membrane (not included): _____ By Adapter (2 x vessel, see technical documentation)
- Nr. elements available: _____1-2-3-4-5-6-7

CERTIFICATIONS:
- Inspection and ASME CODE stamped (quotation on request)
- CE mark stamped (quotation on request)
- 97/23/CE Directive (PED)
- NSF/ANSI 61
- ISO 9001:2000

APPLICATIONS:
- Reverse Osmose
- Ultrafiltration.

ACCESSORIES TO BE ORDERED SEPARATELY:
- Adapter: 2 x vessel, see technical documentation
- Victaulic Joints 1 1/2" VIC0001
- Sample Pro Valve (permeate stream): _____ CA0001

WATER TREATMENTS
- Domestics
- Industrials
- Municipals
- Drains (contact Hytek Technical Office)
- Sea
- Farmaceutics
- Alimentary

www.hytekintl.com info@hytekintl.com

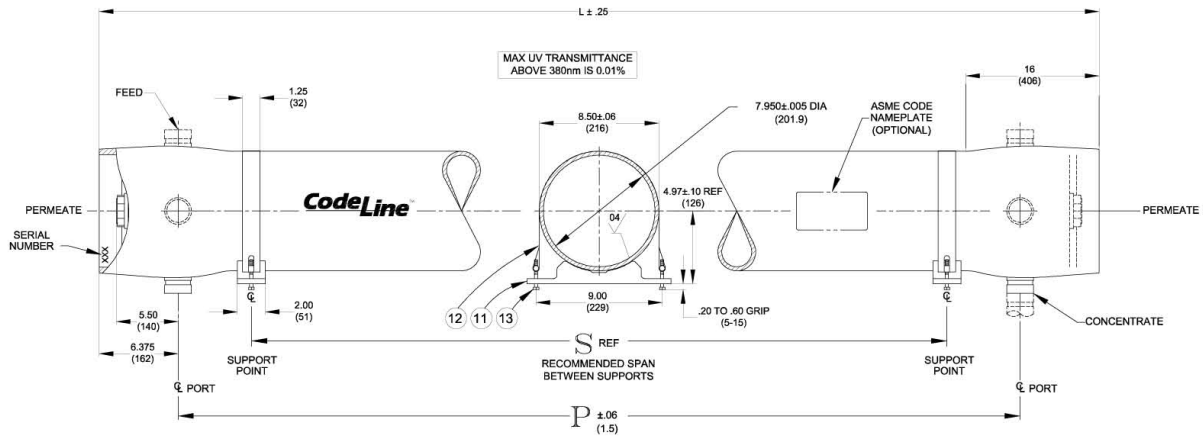

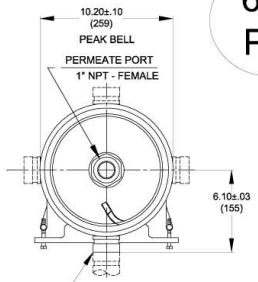

600 PSI

VIEW AT CENTER SUPPORT

CENTER VESSEL ON 2 OR 3 SUPPORTS
AT SPAN(S) "S" : 3 SUPPORTS REQUIRED
FOR LENGTHS -4 AND OVER

CAUTION: INCORRECT MANIFOLDING WILL CAUSE SEVERE LOCAL STRESS AROUND PORT AND MAY RESULT IN LEAKS AND PREMATURE FAILURE; TAKE EVERY PRECAUTION LISTED ON REVERSE, SEE INSTALLATION INSTRUCTIONS FOR FURTHER DETAILS

DWG REF	QTY	PART NUMBER	DESCRIPTION	MATERIAL
SHELL				
1	1	ORDER SECTION	SHELL	Filament Wound Epoxy/Glass composites - Head locking grooves integrally wound in place.
2	A/R		F/C Port	316 L Stainless Steel / Equivalent.
3	A/R		F/C Port Seal	Ethylene Propylene
HEAD				
4	2	96157	Bearing Plate	6061-T6 Aluminium alloy - Hard anodized
5	2	96160	Sealing Plate	Engineering Thermoplastic.
6	2	96162	Permeate Port	Engineering Thermoplastic.
7	2	45066	Port Nut	Engineering Thermoplastic.
8	2	96000	Head Seal	Ethylene Propylene - O - Ring
9	2	45312	Perm Port Seal	Ethylene Propylene - O - Ring
HEAD INTERLOCK				
10	2	47336	Quik Release Spiral Ring	316 Stainless Steel.
VESSEL SUPPORT				
11	* 2	52169	Saddle	Engineering Thermoplastic.
12	* 2	45042	Strap Assy.	304 Stainless Steel-PVC Cushion.
13	4	46265	Strap screw.	5/16-18 UNC, 18-8 Stainless Steel.
ELEMENT INTERFACE				
14	2	A/R	Adapter	Engineering Thermoplastic.
15	2	52245	Adapter seal	Ethylene Propylene - O - Ring
16	4	A/R	PWT Seal	Ethylene Propylene - O - Ring
17	1	96163	Thrust Cone	Engineering Thermoplastic.
* 3 each furnished with length code 4,5,6,7 & 8.				

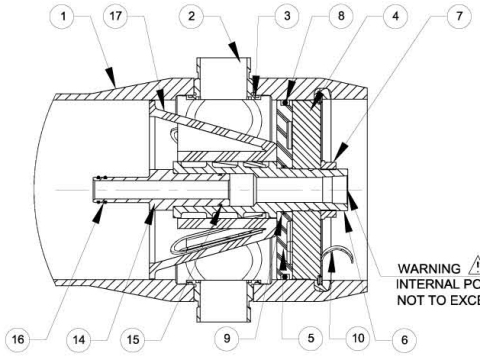

WARNING ⚠
INTERNAL PORT PRESSURE
NOT TO EXCEED 125 PSI

SECTION THROUGH END CLOSURE

Dash Length	L IN(MM)	P IN(MM)	S IN(MM)	Approx Weight LB(KG)
-1	59.75 (1518)	47 (1194)	25X1 (635)	93 (42)
-2	99.75 (2534)	87 (2210)	56X1 (1422)	115 (52)
-3	139.75 (3550)	127 (3226)	80X1 (2032)	137 (62)
-4	179.75 (4566)	167 (4242)	64X2 (1626)	159 (72)
-5	219.75 (5582)	207 (5258)	78X2 (1981)	181 (82)
-6	259.75 (6598)	247 (6274)	92X2 (2337)	203 (92)
-7	299.75 (7614)	287 (7290)	106X2 (2692)	225 (102)
# -8	339.75 (8630)	327 (8306)	120X2 (3048)	247 (112)

NOTES:-
- MAX. ANGULAR VARIATION BETWEEN ANY PORTS ±0.5°.
- DIMENSION IN INCHES (MM APPROX.)
- SHELL EXTERIOR COATED WITH WHITE, HIGH GLOSS POLYURETHANE PAINT.
- NOT TO BE USED FOR CONSTRUCTION UNLESS CERTIFIED.
- ITEM 17 DOWNSTREAM ONLY.

CodeLine™ Pentair Water

DRAWN	PGS	CODELINE - 80S60 MEMBRANE HOUSING			
CHECKED	MD	DATE 02SEP05	DWG. NO. 99162		REV. C
APPROVED	RM	ECN 978	SCALE NONE	SIZE A3	SHEET 1OF 2

RATING:

DESIGN PRESSURE…….600 PSIG at 190°F (4.1 MPa at 88°C)
MIN. OPERATING TEMP……..……..20°F (-7°C)
FACTORY TEST PRESSURE……CE / ASME
900 PSIG / 660 PSIG
(6.20 MPa) (4.55 MPa)
QUALIFICATION PRESSURE……...3600 PSI (24.8 MPa)

INTENDED USE:

The CodeLine 80S60 Fiberglass RO Pressure Vessel is designed for continuous, long term use as a housing for reverse osmosis membrane elements to desalt typical brackish waters at pressures up to 600 psi. Any make of eight-inch nominal diameter spiral-wound element is easily accommodated; the appropriate interfacing hardware for the element specified is furnished with the vessel.

The CodeLine 80S60 is designed in accordance with the engineering standards of the Boiler and Pressure Vessel Code of the American Society of Mechanical Engineers (ASME) Code. At small additional cost vessels can be inspected during construction by an ASME Authorized Inspector and ASME Code stamped.

The CodeLine 80S60 must be installed, operated and maintained in accordance with the listed precautions and good industrial practice to assure safe operation over a long service life.

The high performance Filament wound FRP shell must be allowed to expand under pressure; undue restraint at support points or piping connections can cause leaks to develop in the shell. This side-ported vessel requires special precautions in mounting and connection to piping so that the vessel will not be subjected to excessive stress due to bending moments acting at the side openings in the fiberglass shell. The end closure, incorporating close fitting, interlocking metal components, must be kept dry and free of corrosion; deterioration can lead to catastrophic mechanical failure of the head.

Pentair Water will assist the purchaser in determining the suitability of this standard vessel for their specific operating conditions. The final determination however, including evaluation of the standard material of construction for compatibility with the specific corrosive environment, shall be the responsibility of the purchaser. Alternate materials with enhanced corrosion resistance are available on special order.

Specifications are subject to change without notice.

PRECAUTIONS:

DO…read, understand and follow all instructions; failure to take every precaution will void warranty and may result in vessel failure
DO…mount the shell on horizontal members at span "S" using compliant vessel supports furnished; tighten hold down straps just snug
DO…align and center side ports with the manifold header. Correct, causes of misalignment in a row of vessels connected to the same header
DO…use flexible type grooved-end pipe couplings, Victaulic® Style 77 or equal, at side ports; allow full, 0.125 inch gap between port and piping, and position piping to maximize flexibility of connection.
DO…provide flexibility in, and support for piping manifolds so that vessel can grow in length under pressure without undue restraint; provide additional flexible joints in large pipes leading to manifold header.
DO…provide overpressure protection for vessel set at not more than 105% of design pressure
DO…inspect end closures regularly; replace components that have deteriorated and correct causes of corrosion

DO NOT…work on any component until first verifying that pressure is relieved from vessel
DO NOT…make rigid piping connections to ports or clamp vessel in any way that resists growth of fiberglass shell under pressure;
***ΔDIA = 0.015 in. (0.4mm) and
***ΔL = 0.2 in. (6mm) for a length code –8 vessel
DO NOT… hang piping manifolds from ports or use vessel in any way to support other components
DO NOT…tighten Permeate Port connection more than one turn past hand tight
DO NOT… operate vessel without connecting both Permeate Ports internally to complete set of elements or otherwise plug ports internally so that external piping connection is not subjected to feed pressure
DO NOT…install Spacer on downstream end of vessel
DO NOT…operate vessel without Thrust Cone installed downstream
DO NOT…pressurize vessel until double-checking to verify that the Locking Ring is in place and fully seated.
DO NOT…operate vessel at pressure and temperature in excess of its rating.
DO NOT…operate vessel with permeate pressure in excess of 125 psi at 190°F (0.86 MPa at 88°C).
DO NOT…tolerate leaks or allow end closures to be routinely wetted in any way
DO NOT…operate outside the pH range 3-10.

ORDERING:
Using the chart below, please check the features you require and fax them with your purchase order to our customer service department for further processing.
For optional materials and features not listed below, please consult the factory for pricing and availability

VESSEL LENGTH CODE – please check one

MODEL OCTA 80S60 ☐ -1 ☐ -2 ☐ -3 ☐ -4 ☐ -5 ☐ -6 ☐ -7 ☐ -8
Consult Sales Manager for Eight Element Housings.

MEMBRANE BRAND AND MODEL – please check one and fill in information

- ❑ Please supply adapters for the following membrane brand and specific model
  Brand_____ Model_____
- ❑ Membrane brand and model information is not currently available, but will be supplied to Pentair Water on or before the following date. ___ / ___ / ___

CERTIFICATION REQUIRED

- ❑ ASME Stamped and National Board Registered (please consult factory for pricing)
- ❑ CE Marked
- ❑ Standard, Certified by Pentair water.

MATERIAL AND PORT CONFIGURATIONS OPTIONS – please check one
- ❑ Standard: all materials and port configurations as per drawing 99162 on the previous page
  NOTE: The options listed below will increase the vessel price. Call factory for pricing details.
- ❑ Option: Customer specified port configuration. Using the chart below, please indicate the customized options you require for each end of the pressure vessel (multiple options are available at each end).
  (Please consult factory as these options will affect pricing and vessel lead time)

FEED PORT CONFIGURATION
- ❑ Standard – 1½" IPS pipe, grooved ends, with ports in-line
- ❑ Optional – Multi-Ports™
  Using the instructions in Order Specification Sheet #99007 please fill out your feed port configuration in the space below. List port location first, followed by port size for each choice.

Serial number end ☐ ☐ ☐ ☐ ☐ ☐ ☐ ☐ ☐
Opposite end ☐ ☐ ☐ ☐ ☐ ☐ ☐ ☐ ☐

PORT SIZE CODE	
D	1½" GROOVED END
E	2" GROOVED END
F	2½" GROOVED END

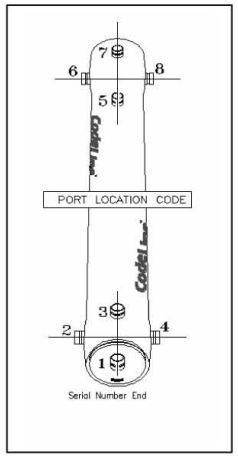

PERMEATE PORT CONFIGURATION:

- ❑ Standard 1" FNPT.
- ❑ Optional – 1.25" MNPT.

For complete information on proper use of the vessel
Please refer to the 80S Series USER'S GUIDE 94182.

PRESSURE VESSELS CODELINE 8"-600 PSI PV 80S60NC "NO CODED" SIDE PORT

PV 80S60NC CODELINE "NO CODED"

MATERIALE DI COMPOSIZIONE:

- Vessel: _____Vetroresina
- Tappi: _____ materiale termoplastico
- Anello rapido di chiusura tappo:_____ 316 SST
- Selle (incluse): _____ materiale termoplastico (nr. 2 per vessel fino al 3 elementi, dal 4 elementi fino al 6 elementi nr. 3 per vessel).
- Tiranti (inclusi):_____in AISI 304 e cuscini in PVC (nr. 2 per vessel fino al 3 elementi, dal 4 elementi fino al 6 elementi nr. 3 per vessel).

DATI TECNICI

- Pressione di progetto: _____ 41 bar a 88°C (600 psi a 190°F)
- Temperatura minima di esercizio: _____ -7°C (20°F)
- Pressione di collaudo: _____ 62 bar (900 psi)
- Pressione di scoppio: _____ 248 bar (3600 psi)
- Uscita permeato: ___ 1" NPT femmina & 1 1/2" in PVC connessione per giunto victaulic (giunto victaulic non incluso)
- Uscita concentrato: _____ 1 1/2" in AISI 316L connessione per giunto victaulic (giunto victaulic non incluso)
- Posizione porte laterali: _____ Standard a squadro
- Colore Standard: _____Bianco
- Connettori per membrana (non inclusi):___ Tramite adapter (2 x vessel, vedi documentazione tecnica)
- Nr. di elementi disponibili: _____1-2-3-4-5-6-7

CERTIFICATI:

- Marcatura CE (su richiesta)
- Direttiva 97/23/CE (PED)
- NSF/ANSI 61
- ISO 9001:2000

APPLICAZIONI:

- Osmosi inversa;
- Ultrafiltrazione.

ACCESSORI DA ORDINARE A PARTE:

- Adapter: nr. 2 x vessel (vedi documentazione tecnica).
- Giunti Victaulic 1 1/2" VIC0001
- Sample Pro Valve (prelievo permeato): _____ CA0001

TRATTAMENTO DELLE ACQUE:

- Domestiche
- Industriali
- Municipali
- Reflue (conntattare l' Ufficio tecnico Hytek)
- di mare
- Farmaceutiche
- Alimentari

"NO CODED" CODELINE PV 80S60NC

MATERIALS COMPOSITION:

- Shell material: _____Fiberglass
- Plugs: _____ Engineering thermoplastic
- Retaining ring _____ 316 SST
- Saddles (included): _____Engineering thermoplastic (nr. 2 supports required up to 3 elements, 3 supports required for length 4 and over)
- Straps (included): _____AISI 304 and cushion in PVC (nr. 2 straps required up to 3 elements, 3 supports required for length 4 and over)

TECHNICAL SHEET:

- Design Pressure: _____ 41 bar a 88°C (600 psi at 190°F)
- Min. Operating temperature: _____ -7°C (20°F)
- Factory Test Pressure: _____ 62 bar (900 psi)
- Burst Pressure: _____ 248 bar (3600 psi)
- Permeate Port: ____ 1" NPT female & 1 1/2" in PVC connection for victaulic joint (victaulic joint not included)
- Concentrate Port: _____1 1/2" in AISI 316L connection for victaulic joint (victaulic joint not included)
- Side Port Position: _____ Standard square
- Standard color: _____ White
- Connection for membrane (not included): _____ By Adapter (2 x vessel, see technical documentation)
- Nr. elements available: _____1-2-3-4-5-6-7

CERTIFICATIONS:

- CE mark stamped (quotation on request)
- 97/23/CE Directive (PED)
- NSF/ANSI 61
- ISO 9001:2000

APPLICATIONS:

- Reverse Osmose
- Ultrafiltration.

ACCESSORIES TO BE ORDERED SEPARATELY:

- Adapter: 2 x vessel, see technical documentation
- Victaulic Joints 1 1/2" VIC0001
- Sample Pro Valve (permeate stream): _____ CA0001

WATER TREATMENTS

- Domestics
- Industrials
- Municipals
- Drains (contact Hytek Technical Office)
- Sea
- Farmaceutics
- Alimentary

www.hytekintl.com info@hytekintl.com

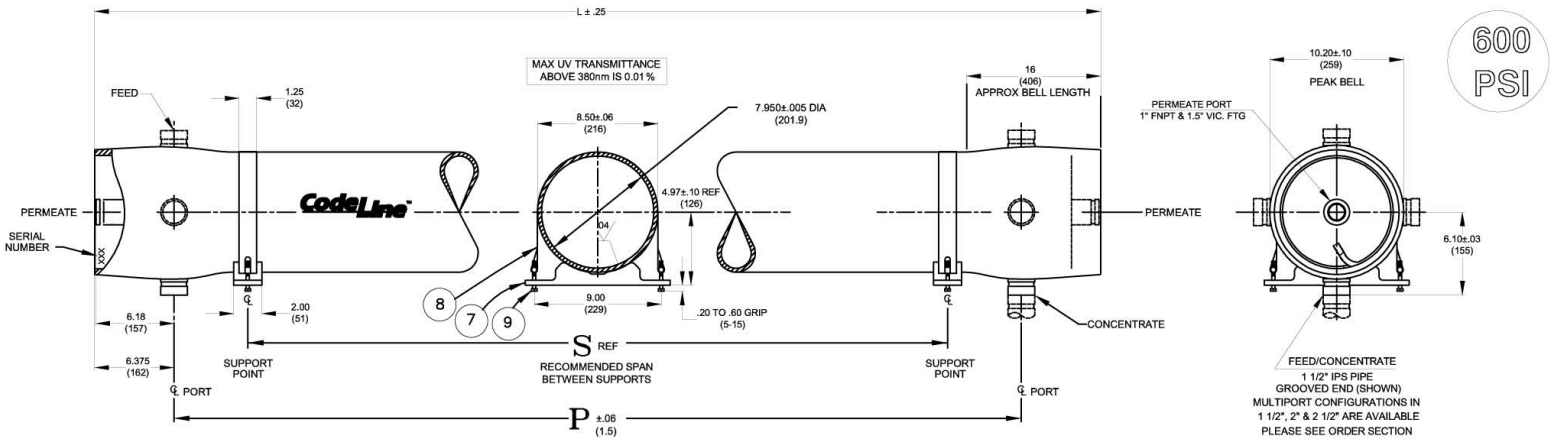

VIEW AT CENTER SUPPORT

CENTER VESSEL ON 2 OR 3 SUPPORTS AT SPAN(S) "S" : 3 SUPPORTS REQUIRED FOR LENGTHS -4 AND OVER

CAUTION: INCORRECT MANIFOLDING WILL CAUSE SEVERE LOCAL STRESS AROUND PORT AND MAY RESULT IN LEAKS AND PREMATURE FAILURE; TAKE EVERY PRECAUTION LISTED ON REVERSE, SEE INSTALLATION INSTRUCTIONS FOR FURTHER DETAILS

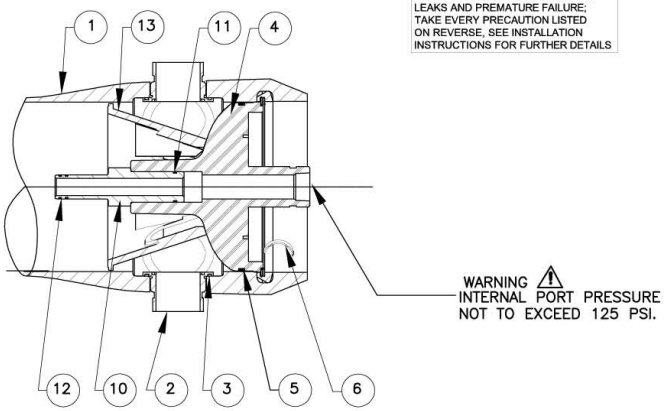

SECTION THROUGH END CLOSURE

DWG REF	QTY	PART NUMBER	DESCRIPTION	MATERIAL
SHELL				
1	1	ORDER SECTION	SHELL	Filament Wound Epoxy/Glass composites - Head locking grooves integrally wound in place.
2	A/R		F/C Port	316 L Stainless Steel / Equivalent.
3	A/R		F/C Port Seal	Ethylene Propylene .
HEAD - NON CODED				
4	2	96244	Elliptical Head Assy.	Engineering Thermoplastic.
5	2	96000	Head Seal	Ethylene Propylene - O - Ring
HEAD INTERLOCK				
6	2	47336	Quik Release Spiral Ring	316 Stainless Steel.
VESSEL SUPPORT				
7	* 2	52169	Saddle	Engineering Thermoplastic.
8	* 2	45042	Strap Assy.	304 Stainless Steel-PVC Cushion.
9	4	46265	Strap screw.	5/16-18 UNC, 18-8 Stainless Steel.
ELEMENT INTERFACE				
10	2	A/R	Adapter	Engineering Thermoplastic.
11	2	52245	Adapter seal	Ethylene Propylene - O - Ring
12	4	A/R	PWT Seal	Ethylene Propylene - O - Ring
13	1	52609	Thrust Cone	Engineering Thermoplastic.
* 3 each furnished with length code 4,5,6,7 & 8.				

Dash Length	L IN(MM)	P IN(MM)	S IN(MM)	Approx Weight LB(KG)
-1	59.75 (1518)	47 (1194)	25X1 (711)	84 (38)
-2	99.75 (2534)	87 (2210)	56X1 (1422)	106 (48)
-3	139.75 (3550)	127 (3226)	80X1 (2032)	128 (58)
-4	179.75 (4566)	167 (4242)	64X2 (1626)	150 (68)
-5	219.75 (5582)	207 (5258)	78X2 (1981)	172 (78)
-6	259.75 (6598)	247 (6274)	92X2 (2337)	194 (88)
-7	299.75 (7614)	287 (7290)	106X2 (2692)	216 (98)
# -8	339.75 (8630)	327 (8306)	120X2 (3048)	238 (108)

NOTES:-
- MAX. ANGULAR VARIATION BETWEEN ANY PORTS ±0.5°.
- DIMENSION IN INCHES (MM APPROX.)
- SHELL EXTERIOR COATED WITH WHITE, HIGH GLOSS POLYURETHANE PAINT.
- NOT TO BE USED FOR CONSTRUCTION UNLESS CERTIFIED.
- ITEM 13 DOWNSTREAM ONLY.

CodeLine™ Pentair Water

DRAWN	KR	CODELINE - 80S60(NON-CODED) MEMBRANE HOUSING			
CHECKED	MD	DATE 05NOV07	DWG. NO. 99174		REV. C
APPROVED	SS	ECN 1104	SCALE NONE	SIZE A3	SHEET 1OF 2

RATING:

DESIGN PRESSURE……..600 PSIG at 190°F (4.1 MPa at 88°C)
MIN. OPERATING TEMP……..……....20°F (-7°C)
FACTORY TEST PRESSURE…….…..900 PSIG (6.2 MPa)

QUALIFICATION PRESSURE……...3600 PSI (24.8 MPa)

INTENDED USE:

The CodeLine 80S60 Non Coded Fiberglass RO Pressure Vessel is designed for continuous, long term use as a housing for reverse osmosis membrane elements to desalt typical brackish waters at pressures up to 600 psi. Any make of eight-inch nominal diameter spiral-wound element is easily accommodated; the appropriate interfacing hardware for the element specified is furnished with the vessel.

The Shell of CodeLine 80S60 Non Coded is designed in accordance with the engineering standards of the Boiler and Pressure Vessel Code of the American Society of Mechanical Engineers (ASME) Code.

The CodeLine 80S60 Non Coded must be installed, operated and maintained in accordance with the listed precautions and good industrial practice to assure safe operation over a long service life.

The high performance Filament wound FRP shell must be allowed to expand under pressure; undue restraint at support points or piping connections can cause leaks to develop in the shell. This side-ported vessel requires special precautions in mounting and connection to piping so that the vessel will not be subjected to excessive stress due to bending moments acting at the side openings in the fiberglass shell. The end closure, incorporating close fitting, interlocking metal components, must be kept dry and free of corrosion; deterioration can lead to catastrophic mechanical failure of the head.

Pentair Water will assist the purchaser in determining the suitability of this standard vessel for their specific operating conditions. The final determination however, including evaluation of the standard material of construction for compatibility with the specific corrosive environment, shall be the responsibility of the purchaser. Alternate materials with enhanced corrosion resistance are available on special order.

Specifications are subject to change without notice.

PRECAUTIONS:

DO…read, understand and follow all instructions; failure to take every precaution will void warranty and may result in vessel failure
DO…mount the shell on horizontal members at span "S" using compliant vessel supports furnished; tighten hold down straps just snug
DO…align and center side ports with the manifold header. Correct, causes of misalignment in a row of vessels connected to the same header
DO…use flexible type grooved-end pipe couplings, Victaulic® Style 77 or equal, at side ports; allow full, 0.125 inch gap between port and piping, and position piping to maximize flexibility of connection.
DO…provide flexibility in, and support for piping manifolds so that vessel can grow in length under pressure without undue restraint; provide additional flexible joints in large pipes leading to manifold header.
DO…provide overpressure protection for vessel set at not more than 105% of design pressure
DO…inspect end closures regularly; replace components that have deteriorated and correct causes of corrosion

DO NOT…work on any component until first verifying that pressure is relieved from vessel
DO NOT…make rigid piping connections to ports or clamp vessel in any way that resists growth of fiberglass shell under pressure;
***ΔDIA = 0.015 in. (0.4mm) and
***ΔL = 0.2 in. (6mm) for a length code –8 vessel
DO NOT… hang piping manifolds from ports or use vessel in any way to support other components
DO NOT…tighten Permeate Port connection more than one turn past hand tight
DO NOT… operate vessel without connecting both Permeate Ports internally to complete set of elements or otherwise plug ports internally so that external piping connection is not subjected to feed pressure
DO NOT…install Spacer on downstream end of vessel
DO NOT…operate vessel without Thrust Cone installed downstream
DO NOT…pressurize vessel until double-checking to verify that the Locking Ring is in place and fully seated.
DO NOT…operate vessel at pressure and temperature in excess of its rating.
DO NOT…operate vessel with permeate pressure in excess of 125 psi at 190°F (0.86 MPa at 88°C).
DO NOT…tolerate leaks or allow end closures to be routinely wetted in any way
DO NOT…operate outside the pH range 3-10.

ORDERING:
Using the chart below, please check the features you require and fax them with your purchase order to our customer service department for further processing.
For optional materials and / or feature not listed below, please consult the factory for pricing and availability

VESSEL LENGTH CODE – please check one

MODEL 80S60 Non Coded ☐ -1 ☐ -2 ☐ -3 ☐ -4 ☐ -5 ☐ -6 ☐ -7 ☐ -8
Consult Sales Manager for Eight Element Housings.

MEMBRANE BRAND AND MODEL – please check one and fill in information

- ❑ Please supply adapters for the following membrane brand and specific model
  Brand_____ Model_____
- ❑ Membrane brand and model information is not currently available, but will be supplied to Pentair Water on or before the following date. ___ / ___ / ___

CERTIFICATION REQUIRED

- ❑ CE Marked
- ❑ Standard, Certified by Pentair water.

MATERIAL AND PORT CONFIGURATIONS OPTIONS – please check one
- ❑ Standard: all materials and port configurations as per drawing 99174on the previous page
  NOTE: The options listed below will increase the vessel price. Call factory for pricing details.
- ❑ Option: Customer specified port configuration. Using the chart below, please indicate the customized options you require for each end of the pressure vessel (multiple options are available at each end).
  (Please consult factory as these options will affect pricing and vessel lead time)

FEED PORT CONFIGURATION
- ❑ Standard – 1½" IPS pipe, grooved ends, with ports in-line
- ❑ Optional – Multi-Ports™

Using the instructions in Order Specification Sheet #99007 please fill out your feed port configuration in the space below. List port location first, followed by port size for each choice.

Serial number end ☐ ☐ ☐ ☐ ☐ ☐ ☐ ☐ ☐
Opposite end ☐ ☐ ☐ ☐ ☐ ☐ ☐ ☐ ☐

PORT SIZE CODE	
D	1½" GROOVED END
E	2" GROOVED END
F	2½" GROOVED END

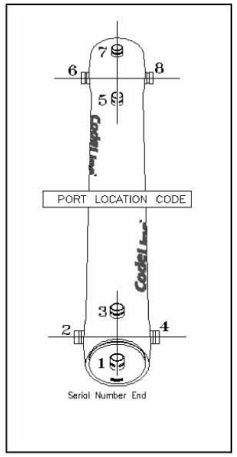

PERMEATE PORT CONFIGURATION:

- ❑ Standard. 1" FNPT & 1.5" VICTUALIC.
- ❑ Optional. 1"BSPF/JIS F-Parallel Thread & 1.5"VIC

For complete information on proper use of the vessel
Please refer to the 80S Series USER'S GUIDE 94182.

PRESSURE VESSELS CODELINE 8"-1000 PSI PV 80S100 "CODED" SIDE PORT

PV 80S100 CODELINE "CODED"

MATERIALE DI COMPOSIZIONE:
- Vessel: _____Vetroresina
- Tappi: _____Lega di alluminio 6061-T6
- Anello di chiusura tappo:_____ 316 SST
- Basamento tappo: _____ materiale termoplastico
- Selle (incluse): _____ materiale termoplastico (nr. 2 per vessel fino al 3 elementi, dal 4 elementi fino al 6 elementi nr. 3 per vessel).
- Tiranti (inclusi):_____in AISI 304 e cuscini in PVC (nr. 2 per vessel fino al 3 elementi, dal 4 elementi fino al 6 elementi nr. 3 per vessel).

DATI TECNICI
- Pressione di progetto: _____ 69 bar a 66°C (1000 psi a 150°F)
- Temperatura minima di esercizio: _____ -7°C (20°F)
- Pressione di collaudo:
• ASME 89 bar (1300 psi)
• CE 103 bar (1500 psi)
- Pressione di scoppio: _____ 414 bar (6000 psi)
- Uscita permeato: _____ 1" NPT femmina
- Uscita concentrato: _____ 1 1/2" in Acciaio Super Duplex connessione per giunto victaulic (giunto victaulic non incluso)
- Posizione porte laterali: _____ Standard a squadro
- Colore Standard: _____Bianco
- Connettori per membrana (non inclusi):___ Tramite adapter (2 x vessel, vedi documentazione tecnica)
- Nr. di elementi disponibili: _____1-2-3-4-5-6-7

CERTIFICATI:
- Ispezione e marcatura ASME CODE (quotazione su richiesta)
- Marcatura CE (quotazione su richiesta)
- Direttiva 97/23/CE (PED)
- NSF/ANSI 61
- ISO 9001:2000

APPLICAZIONI:
- Osmosi inversa;
- Ultrafiltrazione.

ACCESSORI DA ORDINARE A PARTE:
- Adapter: nr. 2 x vessel (vedi documentazione tecnica).
- Giunti Victaulic 1 1/2" VIC0001
- Sample Pro Valve (prelievo permeato): _____ CA0001

TRATTAMENTO DELLE ACQUE:
- Domestiche
- Industriali
- Municipali
- Reflue (conntattare l' Ufficio tecnico Hytek)
- di mare
- Farmaceutiche
- Alimentari

"CODED" CODELINE PV 80S100

MATERIALS COMPOSITION:
- Shell material: _____Fiberglass
- Plugs: _____ 6061-T6 Hard anodized Alum. alloy
- Retaining ring _____ 316 SST
- Bearing ring _____ Engineering thermoplastic
- Saddles (included): _____Engineering thermoplastic (nr. 2 supports required up to 3 elements, 3 supports required for length 4 and over)
- Straps (included): _____AISI 304 and cushion in PVC (nr. 2 straps required up to 3 elements, 3 supports required for length 4 and over)

TECHNICAL SHEET:
- Design Pressure: _____ 69 bar a 66°C (1000 psi at 150°F)
- Min. Operating temperature: _____ -7°C (20°F)
- Factory Test Pressure:
• ASME 89 bar (1300 psi)
• CE 103 bar (1500 psi)
- Burst Pressure: _____ 414 bar (6000 psi)
-Permeate Port: _____ 1" NPT female
- Concentrate Port: _____1 1/2" in Super Duplex Stainless Steel connection for victaulic joint (victaulic joint not included)
- Side Port Position: _____Standard square
- Standard color: _____ White
- Connection for membrane (not included): _____ By Adapter (2 x vessel, see technical documentation)
- Nr. elements available: _____1-2-3-4-5-6-7

CERTIFICATIONS:
- Inspection and ASME CODE stamped (quotation on request)
- CE mark stamped (quotation on request)
- 97/23/CE Directive (PED)
- NSF/ANSI 61
- ISO 9001:2000

APPLICATIONS:
- Reverse Osmose
- Ultrafiltration.

ACCESSORIES TO BE ORDERED SEPARATELY:
- Adapter: 2 x vessel, see technical documentation
- Victaulic Joints 1 1/2" VIC0001
- Sample Pro Valve (permeate stream): _____ CA0001

WATER TREATMENTS
- Domestics
- Industrials
- Municipals
- Drains (contact Hytek Technical Office)
- Sea
- Farmaceutics
- Alimentary

www.hytekintl.com info@hytekintl.com

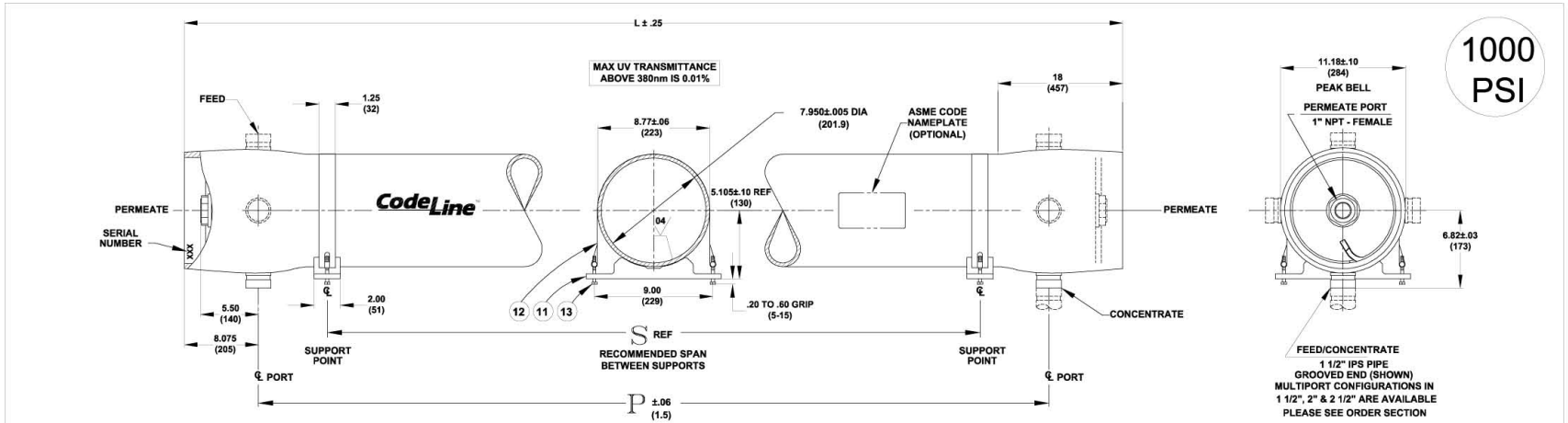

1000 PSI

VIEW AT CENTER SUPPORT

CENTER VESSEL ON 2 OR 3 SUPPORTS AT SPAN(S) "S" : 3 SUPPORTS REQUIRED FOR LENGTHS -4 AND OVER

CAUTION: INCORRECT MANIFOLDING WILL CAUSE SEVERE LOCAL STRESS AROUND PORT AND MAY RESULT IN LEAKS AND PREMATURE FAILURE; TAKE EVERY PRECAUTION LISTED ON REVERSE, SEE INSTALLATION INSTRUCTIONS FOR FURTHER DETAILS

DWG REF	QTY	PART NUMBER	DESCRIPTION	MATERIAL
SHELL				
1	1	ORDER SECTION	SHELL	Filament Wound Epoxy/Glass composites - Head locking grooves integrally wound in place.
2	A/R		F/C Port	Super Austenitic / Super Duplex Stainless Steel.
3	A/R		F/C Port Seal	Ethylene Propylene
HEAD				
4	2	96158	Bearing Plate	6061-T6 Aluminium alloy - Hard anodized
5	2	96160	Sealing Plate	Engineering Thermoplastic.
6	2	96162	Permeate Port	Engineering Thermoplastic.
7	2	45066	Port Nut	Engineering Thermoplastic.
8	2	96000	Head Seal	Ethylene Propylene - O - Ring
9	2	45312	Perm Port Seal	Ethylene Propylene - O - Ring
HEAD INTERLOCK				
10	2	47336	QuikRelease Spiral Ring	316 Stainless Steel.
VESSEL SUPPORT				
11	* 2	52169	Saddle	Engineering Thermoplastic.
12	* 2	45042	Strap Assy.	304 Stainless Steel-PVC Cushion.
13	4	46265	Strap screw.	5/16-18 UNC, 18-8 Stainless Steel.
ELEMENT INTERFACE				
14	2	A/R	Adapter	Engineering Thermoplastic.
15	2	52245	Adapter seal	Ethylene Propylene - O - Ring
16	4	A/R	PWT Seal	Ethylene Propylene - O - Ring
17	1	96163	Thrust Cone	Engineering Thermoplastic.
* 3 each furnished with length code 4,5,6,7 & 8.				

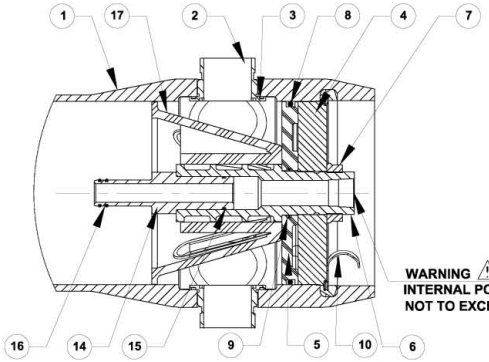

WARNING ⚠
INTERNAL PORT PRESSURE NOT TO EXCEED 125 PSI

SECTION THROUGH END CLOSURE

NOTES:-
- MAX. ANGULAR VARIATION BETWEEN ANY PORTS ±0.5°.
- DIMENSION IN INCHES (MM APPROX.)
- SHELL EXTERIOR COATED WITH WHITE, HIGH GLOSS POLYURETHANE PAINT.
- NOT TO BE USED FOR CONSTRUCTION UNLESS CERTIFIED.
- ITEM 17 DOWNSTREAM ONLY.

Dash Length	L IN(MM)	P IN(MM)	S IN(MM)	Approx Weight LB(KG)
-1	63.15 (1604)	47 (1194)	25X1 (635)	137 (62)
-2	103.15 (2620)	87 (2210)	56X1 (1422)	170 (77)
-3	143.15 (3636)	127 (3226)	80X1 (2032)	203 (92)
-4	183.15 (4652)	167 (4242)	64X2 (1626)	236 (107)
-5	223.15 (5668)	207 (5258)	78X2 (1981)	269 (122)
-6	263.15 (6684)	247 (6274)	92X2 (2337)	303 (137)
-7	303.15 (7700)	287 (7290)	106X2 (2692)	336 (152)
# -8	343.15 (8716)	327 (8306)	120X2 (3048)	369 (167)

CodeLine™ Pentair Water

DRAWN	PGS	CODELINE - 80S100 MEMBRANE HOUSING				
CHECKED	MD	DATE 02SEP05	DWG. NO. 99163			REV. C
APPROVED	RM	ECN 978	SCALE NONE	SIZE A3	SHEET 1OF 2	

RATING:

DESIGN PRESSURE……...1000 PSIG at 150°F (6.9 MPa at 66°C)
MIN. OPERATING TEMP……..…..……...20°F (-7°C)
FACTORY TEST PRESSURE……..CE / ASME
1500 PSIG / 1100 PSIG
(10.34 MPa) (7.58 MPa)
QUALIFICATION PRESSURE...……..….6000 PSI (41.37 MPa)

INTENDED USE:

The CodeLine 80S100 Fiberglass RO Pressure Vessel is designed for continuous, long term use as a housing for reverse osmosis membrane elements to desalt typical brackish and sea waters at pressures up to 1000 psi. Any make of eight-inch nominal diameter spiral-wound element is easily accommodated; the appropriate interfacing hardware for the element specified is furnished with the vessel.

The CodeLine 80S100 is designed in accordance with the engineering standards of the Boiler and Pressure Vessel Code of the American Society of Mechanical Engineers (ASME) Code. At small additional cost vessels can be inspected during construction by an ASME Authorized Inspector and ASME Code stamped.

The CodeLine 80S100 must be installed, operated and maintained in accordance with the listed precautions and good industrial practice to assure safe operation over a long service life.

The high performance Filament wound FRP shell must be allowed to expand under pressure; undue restraint at support points or piping connections can cause leaks to develop in the shell. This side-ported vessel requires special precautions in mounting and connection to piping so that the vessel will not be subjected to excessive stress due to bending moments acting at the side openings in the fiberglass shell. The end closure, incorporating close fitting, interlocking metal components, must be kept dry and free of corrosion; deterioration can lead to catastrophic mechanical failure of the head.

Pentair Water will assist the purchaser in determining the suitability of this standard vessel for their specific operating conditions. The final determination however, including evaluation of the standard material of construction for compatibility with the specific corrosive environment, shall be the responsibility of the purchaser. Alternate materials with enhanced corrosion resistance are available on special order.

Specifications are subject to change without notice.

PRECAUTIONS:

DO…read, understand and follow all instructions; failure to take every precaution will void warranty and may result in vessel failure
DO…mount the shell on horizontal members at span "S" using compliant vessel supports furnished; tighten hold down straps just snug
DO…align and center side ports with the manifold header. Correct, causes of misalignment in a row of vessels connected to the same header
DO…use flexible type grooved-end pipe couplings, Victaulic® Style 77 or equal, at side ports; allow full, 0.125 inch gap between port and piping, and position piping to maximize flexibility of connection.
DO…provide flexibility in, and support for piping manifolds so that vessel can grow in length under pressure without undue restraint; provide additional flexible joints in large pipes leading to manifold header.
DO…provide overpressure protection for vessel set at not more than 105% of design pressure
DO…inspect end closures regularly; replace components that have deteriorated and correct causes of corrosion

DO NOT…work on any component until first verifying that pressure is relieved from vessel
DO NOT…make rigid piping connections to ports or clamp vessel in any way that resists growth of fiberglass shell under pressure;
***ΔDIA = 0.015 in. (0.4mm) and
***ΔL = 0.2 in. (6mm) for a length code –8 vessel
DO NOT… hang piping manifolds from ports or use vessel in any way to support other components
DO NOT…tighten Permeate Port connection more than one turn past hand tight
DO NOT… operate vessel without connecting both Permeate Ports internally to complete set of elements or otherwise plug ports internally so that external piping connection is not subjected to feed pressure
DO NOT…install Spacer on downstream end of vessel
DO NOT…operate vessel without Thrust Cone installed downstream
DO NOT…pressurize vessel until double-checking to verify that the Locking Ring is in place and fully seated.
DO NOT…operate vessel at pressure and temperature in excess of its rating.
DO NOT…operate vessel with permeate pressure in excess of 125 psi at 150°F (0.86 MPa at 66°C).
DO NOT…tolerate leaks or allow end closures to be routinely wetted in any way
DO NOT…operate outside the pH range 3-10.

Note: This vessel can be operated at 190°F (88°C) upto 600 psi (4.1 MPa)

ORDERING:
Using the chart below, please check the features you require and fax them with your purchase order to our customer service department for further processing.
For optional materials and / or feature not listed below, please consult the factory for pricing and availability

VESSEL LENGTH CODE – please check one

MODEL 80S100 ☐ -1 ☐ -2 ☐ -3 ☐ -4 ☐ -5 ☐ -6 ☐ -7 ☐ -8
Consult Sales Manager for Eight Element Housings.

MEMBRANE BRAND AND MODEL – please check one and fill in information

❑ Please supply adapters for the following membrane brand and specific model
Brand_____ Model_____

❑ Membrane brand and model information is not currently available, but will be supplied to Pentair Water on or before the following date. ___ / ___ / ___

CERTIFICATION REQUIRED

❑ ASME Stamped and National Board Registered (please consult factory for pricing)
❑ CE Marked
❑ Standard, Certified by Pentair water.

MATERIAL AND PORT CONFIGURATIONS OPTIONS – please check one
❑ Standard: all materials and port configurations as per drawing 99163 on the previous page
NOTE: The options listed below will increase the vessel price. Call factory for pricing details.
❑ Option: Customer specified port configuration. Using the chart below, please indicate the customized options you require for each end of the pressure vessel (multiple options are available at each end).
(Please consult factory as these options will affect pricing and vessel lead time)

FEED PORT CONFIGURATION
❑ Standard – 1½" IPS pipe, grooved ends, with ports in-line
❑ Optional – Multi-Ports™
Using the instructions in Order Specification Sheet #99007 please fill out your feed port configuration in the space below.
List port location first, followed by port size for each choice.
2.5" Ports not available in 90° configurations.

Serial number end ☐ ☐ ☐ ☐ ☐ ☐ ☐ ☐ ☐
Opposite end ☐ ☐ ☐ ☐ ☐ ☐ ☐ ☐ ☐

PERMEATE PORT CONFIGURATION

❑ Standard 1" FNPT.
❑ Optional – 1.25" MNPT.

For complete information on proper use of the vessel
Please refer to the 80S Series USER'S GUIDE 94182.

PORT SIZE CODE	
D	1½" GROOVED END
E	2" GROOVED END
F	2½" GROOVED END

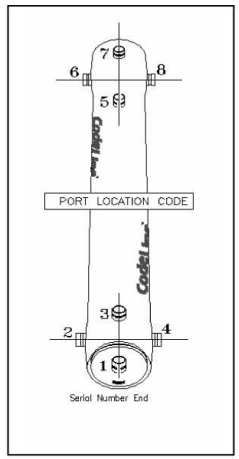

 © Pentair Water.

PRESSURE VESSELS CODELINE 8"-1200 PSI PV 80S120 "CODED" SIDE PORT

PV 80S120 CODELINE "CODED"

MATERIALE DI COMPOSIZIONE:
- Vessel: _____Vetroresina
- Tappi: _____Lega di alluminio 6061-T6
- Anello di chiusura tappo:_____ 316 SST
- Basamento tappo: _____ materiale termoplastico
- Selle (incluse): _____ materiale termoplastico (nr. 2 per vessel fino al 3 elementi, dal 4 elementi fino al 6 elementi nr. 3 per vessel).
- Tiranti (inclusi):_____in AISI 304 e cuscini in PVC (nr. 2 per vessel fino al 3 elementi, dal 4 elementi fino al 6 elementi nr. 3 per vessel).

DATI TECNICI
- Pressione di progetto: _____ 83 bar a 66°C (1200 psi a 150°F)
- Temperatura minima di esercizio: _____ -7°C (20°F)
- Pressione di collaudo:
• ASME 107 bar (1560 psi)
• CE 124 bar (1800 psi)
- Pressione di scoppio: _____ 496 bar (7200 psi)
- Uscita permeato: _____ 1" NPT femmina
- Uscita concentrato: _____ 1 1/2" in Acciaio Super Duplex connessione per giunto victaulic (giunto victaulic non incluso)
- Posizione porte laterali: _____ Standard a squadro
- Colore Standard: _____Bianco
- Connettori per membrana (non inclusi):___ Tramite adapter (2 x vessel, vedi documentazione tecnica)
- Nr. di elementi disponibili: _____1-2-3-4-5-6-7

CERTIFICATI:
- Ispezione e marcatura ASME CODE (quotazione su richiesta)
- Marcatura CE (quotazione su richiesta)
- Direttiva 97/23/CE (PED)
- NSF/ANSI 61
- ISO 9001:2000

APPLICAZIONI:
- Osmosi inversa;
- Ultrafiltrazione.

ACCESSORI DA ORDINARE A PARTE:
- Adapter: nr. 2 x vessel (vedi documentazione tecnica).
- Giunti Victaulic 1 1/2" VIC0001
- Sample Pro Valve (prelievo permeato): _____ CA0001

TRATTAMENTO DELLE ACQUE:
- Domestiche
- Industriali
- Municipali
- Reflue (conntattare l' Ufficio tecnico Hytek)
- di mare
- Farmaceutiche
- Alimentari

"CODED" CODELINE PV 80S120

MATERIALS COMPOSITION:
- Shell material: _____Fiberglass
- Plugs: _____ 6061-T6 Hard anodized Alum. alloy
- Retaining ring _____ 316 SST
- Bearing ring _____ Engineering thermoplastic
- Saddles (included): _____Engineering thermoplastic (nr. 2 supports required up to 3 elements, 3 supports required for length 4 and over)
- Straps (included): _____AISI 304 and cushion in PVC (nr. 2 straps required up to 3 elements, 3 supports required for length 4 and over)

TECHNICAL SHEET:
- Design Pressure: _____ 83 bar a 66°C (1200 psi at 150°F)
- Min. Operating temperature: _____ -7°C (20°F)
- Factory Test Pressure:
• ASME 107 bar (1560 psi)
• CE 124 bar (1800 psi)
- Burst Pressure: _____ 496 bar (7200 psi)
-Permeate Port: _____ 1" NPT female
- Concentrate Port: _____1 1/2" in Super Duplex Stainless Steel connection for victaulic joint (victaulic joint not included)
- Side Port Position: _____Standard square
- Standard color: _____ White
- Connection for membrane (not included): _____ By Adapter (2 x vessel, see technical documentation)
- Nr. elements available: _____1-2-3-4-5-6-7

CERTIFICATIONS:
- Inspection and ASME CODE stamped (quotation on request)
- CE mark stamped (quotation on request)
- 97/23/CE Directive (PED)
- NSF/ANSI 61
- ISO 9001:2000

APPLICATIONS:
- Reverse Osmose
- Ultrafiltration.

ACCESSORIES TO BE ORDERED SEPARATELY:
- Adapter: 2 x vessel, see technical documentation
- Victaulic Joints 1 1/2" VIC0001
- Sample Pro Valve (permeate stream): _____ CA0001

WATER TREATMENTS
- Domestics
- Industrials
- Municipals
- Drains (contact Hytek Technical Office)
- Sea
- Farmaceutics
- Alimentary

www.hytekintl.com info@hytekintl.com

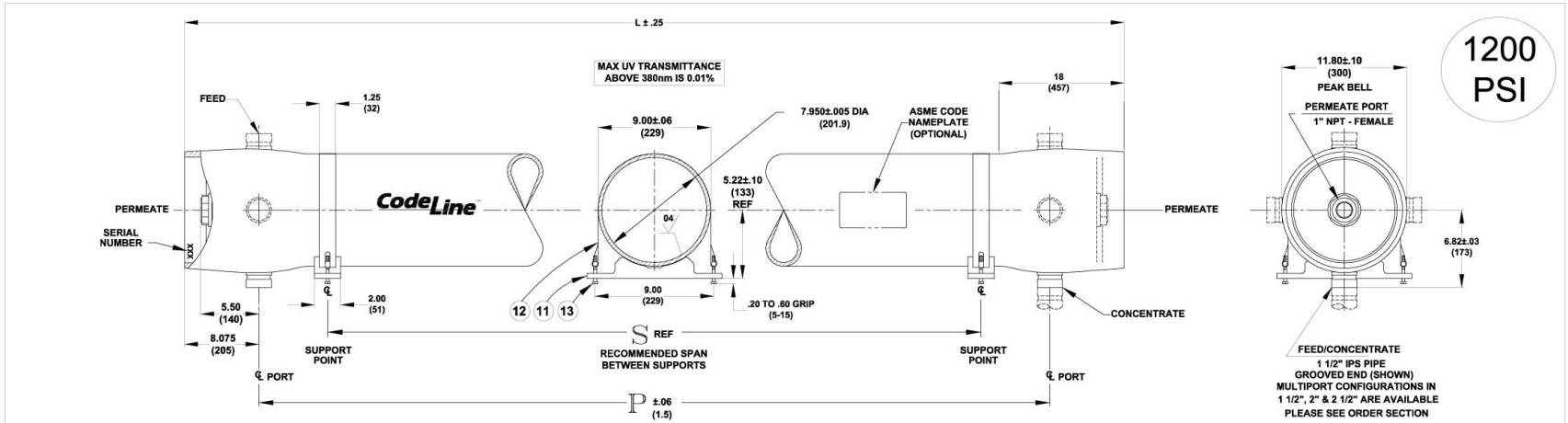

1200 PSI

VIEW AT CENTER SUPPORT

CENTER VESSEL ON 2 OR 3 SUPPORTS AT SPAN(S) "S" : 3 SUPPORTS REQUIRED FOR LENGTHS -4 AND OVER

CAUTION: INCORRECT MANIFOLDING WILL CAUSE SEVERE LOCAL STRESS AROUND PORT AND MAY RESULT IN LEAKS AND PREMATURE FAILURE; TAKE EVERY PRECAUTION LISTED ON REVERSE, SEE INSTALLATION INSTRUCTIONS FOR FURTHER DETAILS

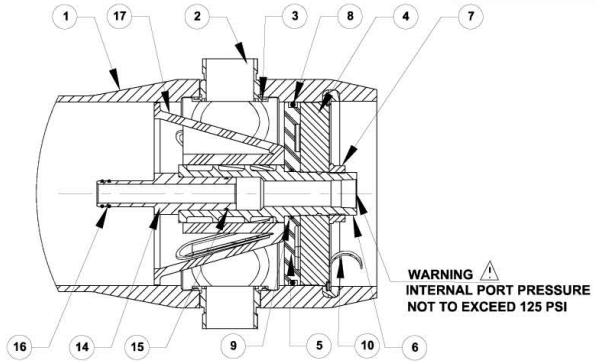

SECTION THROUGH END CLOSURE

DWG REF	QTY	PART NUMBER	DESCRIPTION	MATERIAL
SHELL				
1	1	ORDER SECTION	SHELL	Filament Wound Epoxy/Glass composites - Head locking grooves integrally wound in place.
2	A/R		F/C Port	Super Austenitic / Super Duplex Stainless Steel.
3	A/R		F/C Port Seal	Ethylene Propylene
HEAD				
4	2	96158	Bearing Plate	6061-T6 Aluminium alloy - Hard anodized
5	2	96160	Sealing Plate	Engineering Thermoplastic.
6	2	96162	Permeate Port	Engineering Thermoplastic.
7	2	45066	Port Nut	Engineering Thermoplastic.
8	2	96000	Head Seal	Ethylene Propylene - O - Ring
9	2	45312	Perm Port Seal	Ethylene Propylene - O - Ring
HEAD INTERLOCK				
10	2	47336	Quik Release Spiral Ring	316 Stainless Steel.
VESSEL SUPPORT				
11	* 2	52169	Saddle	Engineering Thermoplastic.
12	* 2	45042	Strap Assy.	304 Stainless Steel-PVC Cushion.
13	4	46265	Strap screw.	5/16-18 UNC, 18-8 Stainless Steel.
ELEMENT INTERFACE				
14	2	A/R	Adapter	Engineering Thermoplastic.
15	2	52245	Adapter seal	Ethylene Propylene - O - Ring
16	4	A/R	PWT Seal	Ethylene Propylene - O - Ring
17	1	96163	Thrust Cone	Engineering Thermoplastic.
* 3 each furnished with length code 4,5,6,7 & 8.				

Dash Length	L IN(MM)	P IN(MM)	S IN(MM)	Approx Weight LB(KG)
-1	63.15 (1604)	47 (1194)	25X1 (635)	170 (77)
-2	103.15 (2620)	87 (2210)	56X1 (1422)	214 (97)
-3	143.15 (3636)	127 (3226)	80X1 (2032)	258 (117)
-4	183.15 (4652)	167 (4242)	64X2 (1626)	303 (137)
-5	223.15 (5668)	207 (5258)	78X2 (1981)	347 (157)
-6	263.15 (6684)	247 (6274)	92X2 (2337)	391 (177)
-7	303.15 (7700)	287 (7290)	106X2 (2692)	435 (197)
# -8	343.15 (8716)	327 (8306)	120X2 (3048)	484 (219)

NOTES:-
- MAX. ANGULAR VARIATION BETWEEN ANY PORTS ±0.5°.
- DIMENSION IN INCHES (MM APPROX.)
- SHELL EXTERIOR COATED WITH WHITE, HIGH GLOSS POLYURETHANE PAINT.
- NOT TO BE USED FOR CONSTRUCTION UNLESS CERTIFIED.
- ITEM 17 DOWNSTREAM ONLY.

CodeLine™ Pentair Water

DRAWN	PGS	CODELINE - 80S120 MEMBRANE HOUSING			
CHECKED	MD	DATE 27JAN06	DWG. NO. 99164		REV. C
APPROVED	RM	ECN 978	SCALE NONE	SIZE A3	SHEET 1 OF 2

RATING:

DESIGN PRESSURE……....1200 PSIG at 150°F (8.27 MPa at 66°C)
MIN. OPERATING TEMP……..…..…..……..…20°F (-7°C)
FACTORY TEST PRESSURE……. CE / ASME
1800 PSIG / 1320 PSIG
(12.41 MPa) (9.10 MPa)

QUALIFICATION PRESSURE……...7200 PSI (49.64 MPa)

INTENDED USE:

The CodeLine 80S120 Fiberglass RO Pressure Vessel is designed for continuous, long term use as a housing for reverse osmosis membrane elements to desalt typical brackish and sea waters at pressures up to 1200 psi. Any make of eight-inch nominal diameter spiral-wound element is easily accommodated; the appropriate interfacing hardware for the element specified is furnished with the vessel.

The CodeLine 80S120 is designed in accordance with the engineering standards of the Boiler and Pressure Vessel Code of the American Society of Mechanical Engineers (ASME) Code. At small additional cost vessels can be inspected during construction by an ASME Authorized Inspector and ASME Code stamped.

The CodeLine 80S120 must be installed, operated and maintained in accordance with the listed precautions and good industrial practice to assure safe operation over a long service life.

The high performance Filament wound FRP shell must be allowed to expand under pressure; undue restraint at support points or piping connections can cause leaks to develop in the shell. This side-ported vessel requires special precautions in mounting and connection to piping so that the vessel will not be subjected to excessive stress due to bending moments acting at the side openings in the fiberglass shell. The end closure, incorporating close fitting, interlocking metal components, must be kept dry and free of corrosion; deterioration can lead to catastrophic mechanical failure of the head.

Pentair Water will assist the purchaser in determining the suitability of this standard vessel for their specific operating conditions. The final determination however, including evaluation of the standard material of construction for compatibility with the specific corrosive environment, shall be the responsibility of the purchaser. Alternate materials with enhanced corrosion resistance are available on special order.

Specifications are subject to change without notice.

PRECAUTIONS:

DO…read, understand and follow all instructions; failure to take every precaution will void warranty and may result in vessel failure
DO…mount the shell on horizontal members at span "S" using compliant vessel supports furnished; tighten hold down straps just snug
DO…align and center side ports with the manifold header. Correct, causes of misalignment in a row of vessels connected to the same header
DO…use flexible type grooved-end pipe couplings, Victaulic® Style 77 or equal, at side ports; allow full, 0.125 inch gap between port and piping, and position piping to maximize flexibility of connection.
DO…provide flexibility in, and support for piping manifolds so that vessel can grow in length under pressure without undue restraint; provide additional flexible joints in large pipes leading to manifold header.
DO…provide overpressure protection for vessel set at not more than 105% of design pressure
DO…inspect end closures regularly; replace components that have deteriorated and correct causes of corrosion

DO NOT…work on any component until first verifying that pressure is relieved from vessel
DO NOT…make rigid piping connections to ports or clamp vessel in any way that resists growth of fiberglass shell under pressure;
***ΔDIA = 0.015 in. (0.4mm) and
***ΔL = 0.2 in. (6mm) for a length code –8 vessel
DO NOT… hang piping manifolds from ports or use vessel in any way to support other components
DO NOT…tighten Permeate Port connection more than one turn past hand tight
DO NOT… operate vessel without connecting both Permeate Ports internally to complete set of elements or otherwise plug ports internally so that external piping connection is not subjected to feed pressure
DO NOT…install Spacer on downstream end of vessel
DO NOT…operate vessel without Thrust Cone installed downstream
DO NOT…pressurize vessel until double-checking to verify that the Locking Ring is in place and fully seated.
DO NOT…operate vessel at pressure and temperature in excess of its rating.
DO NOT…operate vessel with permeate pressure in excess of 125 psi at 150°F (0.86 MPa at 66°C).
DO NOT…tolerate leaks or allow end closures to be routinely wetted in any way
DO NOT…operate outside the pH range 3-10.

Note: This vessel can be operated at 190°F (88°C) upto 600 psi (4.1 MPa)

ORDERING:
Using the chart below, please check the features you require and fax them with your purchase order to our customer service department for further processing.
For optional materials and / or feature not listed below, please consult the factory for pricing and availability

VESSEL LENGTH CODE – please check one

MODEL 80S120 ☐ -1 ☐ -2 ☐ -3 ☐ -4 ☐ -5 ☐ -6 ☐ -7 ☐ -8
Consult Sales Manager for Eight Element Housings.

MEMBRANE BRAND AND MODEL – please check one and fill in information

- ❑ Please supply adapters for the following membrane brand and specific model
  Brand_____ Model_____
- ❑ Membrane brand and model information is not currently available, but will be supplied to Pentair Water on or before the following date. ___ / ___ / ___

CERTIFICATION REQUIRED

- ❑ ASME Stamped and National Board Registered (please consult factory for pricing)
- ❑ CE Marked.
- ❑ Standard, Certified by Pentair water.

MATERIAL AND PORT CONFIGURATIONS OPTIONS – please check one
- ❑ Standard: all materials and port configurations as per drawing 99164 on the previous page
  NOTE: The options listed below will increase the vessel price. Call factory for pricing details.
- ❑ Option: Customer specified port configuration. Using the chart below, please indicate the customized options you require for each end of the pressure vessel (multiple options are available at each end).
  (Please consult factory as these options will affect pricing and vessel lead time)

FEED PORT CONFIGURATION
- ❑ Standard – 1½" IPS pipe, grooved ends, with ports in-line
- ❑ Optional – Multi-Ports™
  Using the instructions in Order Specification Sheet #99007 please fill out your feed port configuration in the space below. List port location first, followed by port size for each choice. 2.5" Ports not available in 90° configurations.

Serial number end ☐ ☐ ☐ ☐ ☐ ☐ ☐ ☐ ☐
Opposite end ☐ ☐ ☐ ☐ ☐ ☐ ☐ ☐ ☐

PORT SIZE CODE	
D	1½" GROOVED END
E	2" GROOVED END
F	2½" GROOVED END

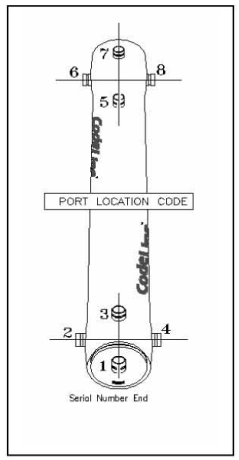

PERMEATE PORT CONFIGURATION

- ❑ Standard 1" FNPT.
- ❑ Optional – 1.25" MNPT.

For complete information on proper use of the vessel
Please refer to the 80S Series USER'S GUIDE 94182.

ADATTATORI PER PRESSURE VESSELS 8" SIDE PORT "CODED" E "NO CODED" / "CODED" E "NO CODED" ADAPTERS FOR PRESSURE VESSELS 8" SIDE PORT

MARCA MEMBRANA MEMBRANA MAKE	MODELLO/MODEL	ADAPTER < 600 PSI	ADAPTER < 600 PSI	TIPO DI ADAPTER ADAPTER TYPE
GE - Osmonics / DESAL				
	SEASOFT 8040 HF	CA50161	CA50165	Male/Maschio
	SEASOFT 8040 HR	CA50161	CA50165	Male/Maschio
	DURATHERM STD RO 8040	CA50161	CA50165	Male/Maschio
	DURATHERM HWS RO 8040	CA50161	CA50165	Male/Maschio
	DURASLICK RO 8040 HS	CA50161	CA50165	Male/Maschio
	DURASLICK RO 8040	CA50161	CA50165	Male/Maschio
	DURASLICK NF 8040 HS	CA50161	CA50165	Male/Maschio
	DURASLICK NF 8040 HS	CA50161	CA50165	Male/Maschio
	CK8040N	CA50161	CA50165	Male/Maschio
	CK8040F	CA50161	CA50165	Male/Maschio
	CG8040F	CA50161	CA50165	Male/Maschio
	CE8040N	CA50161	CA50165	Male/Maschio
	CE8040F	CA50161	CA50165	Male/Maschio
	CD8040F	CA50161	CA50165	Male/Maschio
	AK8040N-400	CA50161	CA50165	Male/Maschio
	AK8040N	CA50161	CA50165	Male/Maschio
	AK8040F-400-CERT	CA50161	CA50165	Male/Maschio
	AK8040F-400	CA50161	CA50165	Male/Maschio
	AK8040F	CA50161	CA50165	Male/Maschio
	AK8040C	CA50161	CA50165	Male/Maschio
	AG8040N-400	CA50161	CA50165	Male/Maschio
	AG8040N	CA50161	CA50165	Male/Maschio
	AG8040F-CERT	CA50161	CA50165	Male/Maschio
	AG8040F-400-CERT	CA50161	CA50165	Male/Maschio
	AG8040F-400	CA50161	CA50165	Male/Maschio
	AG8040F	CA50161	CA50165	Male/Maschio
	AG8040C	CA50161	CA50165	Male/Maschio
	AD8040F	CA50161	CA50165	Male/Maschio
	AD8040	CA50165	-	Male/Maschio
	AE8040	CA50165	-	Male/Maschio
	AG8040	CA50161	-	Male/Maschio
	AK8040	CA50161	-	Male/Maschio
	DK8040	CA51395	-	Male/Maschio
	DL8040	CA51395	-	Male/Maschio
	EW8040	CA51395	-	Male/Maschio
	GE8040	CA51395	-	Male/Maschio
	GH8040	CA51395	-	Male/Maschio
	GK8040	CA51395	-	Male/Maschio
	GM8040	CA51395	-	Male/Maschio
	GN8040	CA51395	-	Male/Maschio
	HL8040	CA50161	-	Male/Maschio
	JX8040	CA51395	-	Male/Maschio
	PW8040	CA51395	-	Male/Maschio
	SC8040	CA51395	-	Male/Maschio
	SE8040	CA51395	-	Male/Maschio
	SG8040	CA51395	-	Male/Maschio
	811	CA51405	CA51404	Male/Maschio
	813	CA51405	CA51404	Male/Maschio
	815HR	CA51405	CA51404	Male/Maschio
	817	CA51405	CA51404	Male/Maschio
	823	CA50161	-	Male/Maschio
	825	CA50165	-	Male/Maschio

www.hytekintl.com info@hytekintl.com

MARCA MEMBRANA MEMBRANA MAKE	MODELLO/MODEL	ADAPTER < 600 PSI	ADAPTER < 600 PSI	TIPO DI ADAPTER ADAPTER TYPE
Filmtec (DOW)				
	SW30HR-8040	CA50161	CA50165	Male/Maschio
	SR90-400	CA50161	CA50165	Male/Maschio
	SW30-380	CA50161	CA50165	Male/Maschio
	RO-390-FF	CA50161	CA50165	Male/Maschio
	HSRO-390-FF	CA51405	CA51404	Male/Maschio
	SG30-400	CA50161	CA50165	Male/Maschio
	SG30LE-430	CA50168	CA50167	Male/Maschio
	NF200-400	CA50168	CA50167	Male/Maschio
	NF270-400	CA50168	CA50167	Male/Maschio
	NF90-400	CA50168	CA50167	Male/Maschio
	NF-400	CA51405	CA51404	Male/Maschio
	SW30HR LE-400	CA50161	CA50165	Male/Maschio
	SW30HR-320	CA50161	CA50165	Male/Maschio
	SW30HR-380	CA50161	CA50165	Male/Maschio
	SW30HR LE-400i	CA94332 (Upstream)	CA94333 (Upstream)	Male/Maschio
		CA50161 (Downstream)	CA50165 (Downstream)	Male/Maschio
	SW30XLE-400i	CA94332 (Upstream)	CA94333 (Upstream)	Male/Maschio
		CA50161 (Downstream)	CA50165 (Downstream)	Male/Maschio
	BW30-365-FR	CA50161	CA50165	Male/Maschio
	BW30-400-FR	CA50161	CA50165	Male/Maschio
	BW30LE-440	CA50168	CA50167	Male/Maschio
	LE-400	CA50161	CA50165	Male/Maschio
	LE-400i	CA94332 (Upstream)	CA94333 (Upstream)	Male/Maschio
		CA50161 (Downstream)	CA50165 (Downstream)	Male/Maschio
	XLE-440	CA50168	CA50167	Male/Maschio
	BW30-365	CA50161	CA50165	Male/Maschio
	BW30-400	CA50161	CA50165	Male/Maschio
	BW30-400/34i	CA94332 (Upstream)	CA94333 (Upstream)	Male/Maschio
		CA50161 (Downstream)	CA50165 (Downstream)	Male/Maschio
	BW30-440i	CA94332 (Upstream)	CA94333 (Upstream)	Male/Maschio
		CA50161 (Downstream)	CA50165 (Downstream)	Male/Maschio
	BWLE-400	CA50161	-	Male/Maschio
	BW30LE-440i	CA94332 (Upstream)	CA94333 (Upstream)	Male/Maschio
		CA50161 (Downstream)	CA50165 (Downstream)	Male/Maschio
	SG30HR-390FF	CA50161	-	Male/Maschio

www.hytekintl.com info@hytekintl.com

MARCA MEMBRANA MEMBRANA MAKE	MODELLO/MODEL	ADAPTER < 600 PSI	ADAPTER < 600 PSI	TIPO DI ADAPTER ADAPTER TYPE
KOCH (Fluid Systems)				
	8323 UF	CA50168	CA50167	Male/Maschio
	TFC-8822FR-365	CA50161	CA50165	Male/Maschio
	TFC-8822FR-400	CA50161	CA50165	Male/Maschio
	TFC-8832FR-575 Magnum	CA50161	CA50165	Male/Maschio
	8133 UF Magnum	CA50168	CA50167	Male/Maschio
	8723 SR2-280 N2	CA50168	CA50167	Male/Maschio
	8733 SR2-420 N2	CA50168	CA50167	Male/Maschio
	8723 SR2-400	CA50168	CA50167	Male/Maschio
	8733 SR2-575 Magnum	CA50168	CA50167	Male/Maschio
	8822HR	CA50161	CA50165	Male/Maschio
	8232HR- Magnum	CA50161	CA50165	Male/Maschio
	8923 S-400	CA50168	CA50167	Male/Maschio
	8933 S-575 Magnum	CA50168	CA50167	Male/Maschio
	8823 ULP-400	CA50168	CA50167	Male/Maschio
	8833 ULP Magnum	CA50168	CA50167	Male/Maschio
	8822 HR-365 Premium	CA50161	CA50165	Male/Maschio
	8822 HR-400 Premium	CA50161	CA50165	Male/Maschio
	8822HR-365	CA50161	CA50165	Male/Maschio
	8822 HR-400	CA50161	CA50165	Male/Maschio
	8832 HR-575 Magnum	CA50161	CA50165	Male/Maschio
	8822 XR-365	CA50161	CA50165	Male/Maschio
	8822 XR-400	CA50161	CA50165	Male/Maschio
	8832 XR-575 Magnum	CA50161	CA50165	Male/Maschio
	2822 HF-370	CA50161	CA50165	Male/Maschio
	2832 HF-560 Magnum	CA50161	CA50165	Male/Maschio
	2822 SS-300 Premium	CA50161	CA50165	Male/Maschio
	2822 SS-300	CA50161	CA50165	Male/Maschio
	2822 SS-360	CA50161	CA50165	Male/Maschio
	2832 SS-465 Magnum	CA50161	CA50165	Male/Maschio
	2832 SS-540 Magnum	CA50161	CA50165	Male/Maschio
	PES8323UF	CA50168	-	Male/Maschio
	ROGA8133UF	CA50168	-	Male/Maschio
	ROGA8221HR	CA51414	-	Male/Maschio
	ROGA8231HR	CA51414	-	Male/Maschio
	ROGA8233LP	CA50168	-	Male/Maschio
	TFC2822	CA50165	-	Male/Maschio
	TFC2832	CA50165	-	Male/Maschio
	TFC8723SR2	CA50168	-	Male/Maschio
	TFC8733SR2	CA50168	-	Male/Maschio
	TFC8821	CA51414	-	Male/Maschio
	TFC8822	CA50161	-	Male/Maschio
	TFC8823ULP	CA50168	-	Male/Maschio
	TFC8831	CA51414	-	Male/Maschio
	TFC8832	CA50161	-	Male/Maschio
	TFC8833ULP	CA50168	-	Male/Maschio
	TFC8921S	CA51414	-	Male/Maschio
	TFC8923S	CA50168	-	Male/Maschio
	TFC8931S	CA51414	-	Male/Maschio
	TFC8933S	CA50168	-	Male/Maschio

www.hytekintl.com info@hytekintl.com

MARCA MEMBRANA MEMBRANA MAKE	MODELLO/MODEL	ADAPTER < 600 PSI	ADAPTER < 600 PSI	TIPO DI ADAPTER ADAPTER TYPE
Hydranautics				
	ESNA1-LF2	CA50161	CA50165	Male/Maschio
	LFC3-LD	CA50161	CA50165	Male/Maschio
	LFC3	CA50161	CA50165	Male/Maschio
	SWC5	CA50161	CA50165	Male/Maschio
	SWC4+	CA50161	CA50165	Male/Maschio
	SWC3+	CA50161	CA50165	Male/Maschio
	SWC2	CA50168	CA50167	Male/Maschio
	SWC1	CA50168	CA50167	Male/Maschio
	ESPA3	CA50161	CA50165	Male/Maschio
	ESPA4	CA50161	CA50165	Male/Maschio
	ESPAB	CA50161	CA50165	Male/Maschio
	ESPA2+	CA50161	CA50165	Male/Maschio
	ESPA2	CA50161	CA50165	Male/Maschio
	ESPA1	CA50161	CA50165	Male/Maschio
	CPA4	CA50161	CA50165	Male/Maschio
	CPA3	CA50161	CA50165	Male/Maschio
	CPA2	CA50161	CA50165	Male/Maschio
	ESNA1	CA50161	-	Male/Maschio
	ESNA1-LF	CA50161	-	Male/Maschio
	ESNA2	CA50161	-	Male/Maschio
	LFC1	CA50161	-	Male/Maschio
	LFC2	CA50161	-	Male/Maschio
	SANRO CPA3	CA50161	-	Male/Maschio
	ANRO CPA4	CA50161	-	Male/Maschio
	SANRO ESPA2	CA50161	-	Male/Maschio
	SANRO LFC3	CA50161	-	Male/Maschio
	SANRO-HS	CA50161	-	Male/Maschio
	SWC	CA50165	-	Male/Maschio
	ES 15-U8	CA51424	-	Female/Femmina
	ES 15-D8	CA51424	-	Female/Femmina
	ES 20-D8	CA51424	-	Female/Femmina
	ES 20-D8+	CA50161	-	Male/Maschio
Saehan - CSM				
	UE8040-PF	CA50161	CA50165	Male/Maschio
	NE8040-70	CA50161	CA50165	Male/Maschio
	NE8040-90	CA50161	CA50165	Male/Maschio
	RE8040-HUE	CA50161	CA50165	Male/Maschio
	RE8040-UE	CA50161	CA50165	Male/Maschio
	RE8040-SH	CA50161	CA50165	Male/Maschio
	RE8040-SN	CA50161	CA50165	Male/Maschio
	RE8040-SR	CA50161	CA50165	Male/Maschio
	RE8040-FL	CA50161	CA50165	Male/Maschio
	RE8040-FN	CA50161	CA50165	Male/Maschio
	RE8040-FE	CA50161	CA50165	Male/Maschio
	RE8040-BLF	CA50161	CA50165	Male/Maschio
	RE8040-BLR	CA50161	CA50165	Male/Maschio
	RE8040-BL(N)	CA50161	CA50165	Male/Maschio
	RE8040-BL	CA50161	CA50165	Male/Maschio
	RE8040-BN	CA50161	CA50165	Male/Maschio
	RE8040-BE	CA50161	CA50165	Male/Maschio
	E8040-BF	CA50161	-	Male/Maschio
	RE8040-HFSR	CA50161	-	Male/Maschio

MARCA MEMBRANA MEMBRANA MAKE	MODELLO/MODEL	ADAPTER < 600 PSI	ADAPTER < 600 PSI	TIPO DI ADAPTER ADAPTER TYPE
Toray (Romembra)				
	SC-6201X	CA51424	CA51424	Female/Femmina
	SC-4201	CA51424	CA51424	Female/Femmina
	SC-2201	CA51424	CA51424	Female/Femmina
	SC-620F	CA51424	CA51424	Female/Femmina
	SUL-G20P	CA51424	CA51424	Female/Femmina
	SUL-720P	CA51424	CA51424	Female/Femmina
	SU-820L	CA51424	CA51424	Female/Femmina
	SU-820FA	CA51424	CA51424	Female/Femmina
	SU-820	CA51424	CA51424	Female/Femmina
	SUL-G20	CA51424	CA51424	Female/Femmina
	SU-720R	CA51424	CA51424	Female/Femmina
	SU-720LF	CA51424	CA51424	Female/Femmina
	SU-720L	CA51424	CA51424	Female/Femmina
	SU-720F	CA51424	CA51424	Female/Femmina
	SU-720	CA51424	CA51424	Female/Femmina
	TM820H-400	CA50161	CA50165	Male/Maschio
	TM820H-370	CA50161	CA50165	Male/Maschio
	TM820L-370	CA50161	CA50165	Male/Maschio
	TM820L-400	CA50161	CA50165	Male/Maschio
	TM820-370	CA50161	CA50165	Male/Maschio
	TM820-400	CA50161	CA50165	Male/Maschio
	TML20-370	CA50161	CA50165	Male/Maschio
	TML20-400	CA50161	CA50165	Male/Maschio
	TMG20-400	CA50168	CA50167	Male/Maschio
	TMG20-430	CA50168	CA50167	Male/Maschio
	TM720-370	CA50161	CA50165	Male/Maschio
	TM720-400	CA50161	CA50165	Male/Maschio
	TM720-430	CA50161	CA50165	Male/Maschio
	SU-220	CA51424	-	Female/Femmina
	SU-620	CA51424	-	Female/Femmina
	SU-820	CA51424	-	Female/Femmina
	TM-720	CA50161	-	Male/Maschio
	TM-820	CA50165	-	Male/Maschio
	TMG-20	CA50168	-	Male/Maschio
Trisep				
	8040-X201-TZA	CA50168	CA50167	Male/Maschio
	8040-TS80-TSA	CA50168	CA50167	Male/Maschio
	8040-XN45-TSA	CA50168	CA50167	Male/Maschio
	8040-ACM5-UWA	CA50168	CA50167	Male/Maschio
	8040-ACM4-UWA	CA50168	CA50167	Male/Maschio
	8040-ACM4-TSFA	CA50161	CA50165	Male/Maschio
	8040-ACM4-TSA	CA50168	CA50167	Male/Maschio
	8040-ACM3-TSA	CA50168	CA50167	Male/Maschio
	8040-ACM2-UWA	CA50168	CA50167	Male/Maschio
	8040-ACM2-TSFA	CA50161	CA50165	Male/Maschio
	8040-ACM2-TSA	CA50168	CA50167	Male/Maschio
	8040-SB20-TSA	CA50168	CA50167	Male/Maschio
	8040-X201-TSFA	CA50161	CA50165	Male/Maschio
	8040-X201-TSA	CA50168	CA50167	Male/Maschio
	8040-ACMA4-TSA	CA50168	-	Male/Maschio
	8040-ACMA4-UWA	CA50168	-	Male/Maschio
	8040-ACMA-TSA	CA50168	-	Male/Maschio

CODELINE MULTI-PORT™ HIGHT FLOW MEMBRANE HOUSINGS

Your Path to Reducing System Cost by Using Multi-port™

By now most end users, designers and builders of membrane separation systems are familiar with CodeLineTM side-ported FRP housings. With over100,000 units in service, we have leaded the industry in helping reduce the cost of membrane systems around the world.
As CodeLine TM has continued to advance side-porting technology, we have focused on developing products that help further reduce systemcost. With this being the case, CodeLine TM is proud to announce Multi-portTM Membrane Housings with 3" Port.

What can it do for your system?
Multi-porting is a term used to describe membrane housing that feature more than one feed or concentrate port per end. For example, two or three ports in the feed end of a membrane housing. Multi-porting allows vessels to be directly linked together. This powerful feature offers the opportunity to eliminate traditional manifolds resulting in potential system cost savings. While the cost reduction aspect of this technology is enticing, system performance must be carefully evaluated to assure that improper port sizing does not compromise long-term system performance.
While using High Flow-ported housing is not difficult, there are many variables that need to be properly addressed before vessels can be specified. To help ensure the performance of your system, please carefully consider the guidelines and pressure drop data on the following pages when attempting to eliminate external manifolds.

Detailed Guidelines for Using Multi-portTM High Flow

Membrane Housings to Eliminate Manifolds
CAUTION: - The following are Guidelines only. They are intended to aid thePurchaser when using the Multi-portTM feature to eliminate manifolds. It is the system designer's responsibility to evaluate the specific applicationand carefully consider these guidelines when sizing ports.
Improper port sizing could lead to poor system performance and/or damage to membrane elements. Please contact Hytek Technical officeif clarification of these Guidelines is required.

Evaluate the pressure drop across each vessel plenum as this will affect the permeate and concentrate flows in each vessel. Typically, the feed and concentrate manifolds connecting to a number of vessels are designed to minimize variations in flow through the vessels. This is accomplished by assuring that the pressure through out a manifold is nearly equal. The greater the differential across a particular manifold, or set of manifolds, the greater the potential for variations in the average feed pressure as well as the differential pressure across the different vessels in a pass. These factors will affect the flow of the product as well as the flow through the vessels.
The same considerations apply when attempting to eliminate manifolds by linking vessels directly together using Multi-portTM vessels. In this case, the pressure drop across the vessel plenum, as well as the entrance and exit losses through the side ports, must be considered. To simplify this process, we have provided calculated test data, which quantifies the total pressure, drop versus the flow ratefor various size ports.
Flow balance the system by taking the combined concentrate flow from the last vessel in a particular pass. This practice is commonly used when multiple filters are connected in parallel. If the feed comes in the first vessel, the combined concentrate should exit the last vessel.
The feed pressure to the last vessel will always be less than the feed pressure to the first vessel. By flow balancing, the concentrate pressure of the last vessel will also be the lowest of any vessel. This tends to keep the pressure drop across all vessels to be as close as possible. The flow pattern is shown in Figure1.

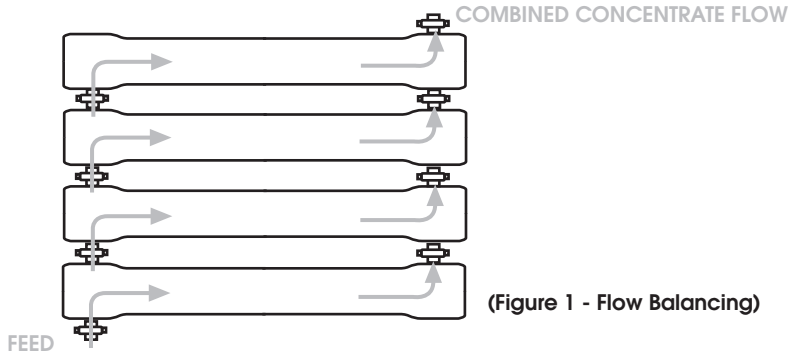

(Figure 1 - Flow Balancing)

www.hytekintl.com info@hytekintl.com

www.hytekintl.com info@hytekintl.com

The down side of this arrangement is that it will cause the average feed flow pressure between the first and last vessel to be the at a maximum value, thus affecting permeate flow in the last vessel..
For simplicity of piping, some customers may desire to take combined concentrate flow from the first vessel in a particular pass. This will result in alower differential pressure and thus a lower concentrate flow in the last vessel.
While this practice is less conservative than flow balancing, it has been successfully used in some systems. In any event, the performance of the membranes in each vessel should be checked to confirm that all are within the membrane manufacturer's guidelines.
Consider feeding from both sides or the center of a pass if the differential pressure when feeding from one side would be excessive. By splitting the feed flow the velocity will be reduced by one half and the pressure drop by an even greater amount since the pressure drop is proportional to the square of the flow.
Feeding from both sides may be most economically feasible where the pressure is low enough to use plastic pipe. This option is shown inFigure 2.

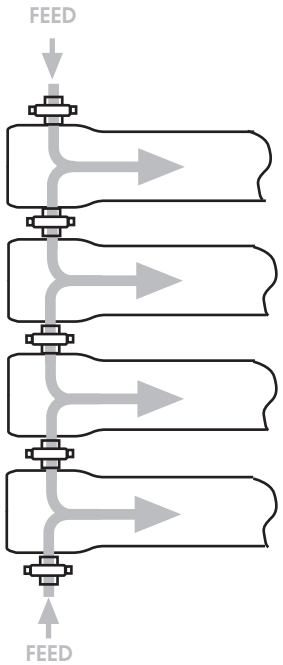

(Figure 2 - Both Sides)

Check with your membrane supplier for evaluation of membrane performance of your proposed system. When properly sized, use of Multi-portTM vessels to eliminate external manifolds will have little if any affect on over all system performance.
However, as pressure drops are increased, systems that are already being operated close to the edge of recommended conditions may experience problems within one or more vessels.
It is therefore recommended that worst case conditions be evaluated carefully in conjunction with your membrane supplier. Consider the effects of higher velocities that may occur during special situations such as flushing or cleaning. It is sometimes advantageous to flush or clean systems at velocities higher than normal.
These situations must be carefully considered when selecting portsizes.
Pressure drops may be considerably increased under such conditions.
Pressure drops across the plenum of a vessel will always be greater than through an equal length of straight pipe of the same size as the port. For this reason you should always select ports at least equal to, and possibly greater than, the size of pipe you would use if manifolds were external.
Do not reduce the size of the feed/concentrate ports in a particular pass, unless you have carefully evaluated the affect on system performance of such reductions. (For brackish water desalination at the recovery above 65% the brine discharge connection size may be reduced as compared to the feed connection size.) Unlike with external manifolds, it is easy to reduce the size of ports of vessels, which are linked together.
The feed port may be one size and the port directly opposite it can be specified a smaller size.
This however could lead to excessive pressure drops. Again, evaluate the affects of such a design carefully. Do not exceed traditional flow velocities.
Even though the pressure drop across each vessel may be acceptable, the velocity of the water through each port must also be evaluated.
It is suggested that the water velocity throughout the entire system be checked for proper velocity, however, the first connection fromthe feed source is typically where problems can occur. While the length of each feed port is very short, velocities in excess of 11 Ft. per second should be avoided to help ensure proper system performance. For your convenience, we have included the published velocities for schedule 40 pipe in this bulletin.
Do not assume, because a set of vessels can be manifolded together, that CodeLine TM recommends or endorses such use in your particular application.
Used properly, multi-porting with 3" ports opens up a whole New World of potential cost savings. With this opportunity comes a responsibility to carefully evaluate projected membrane performance.
CodeLine TM recommends that you work directly with you membrane supplier to obtain approval of your proposed

Flow Rate V/s Velocity Schedule 40 pipe

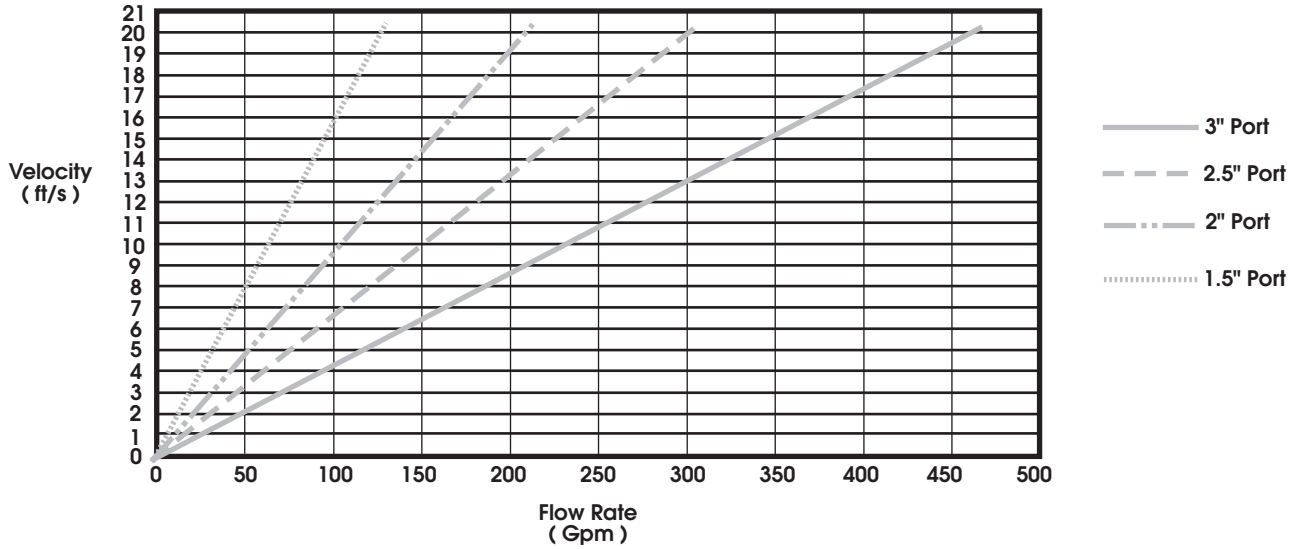

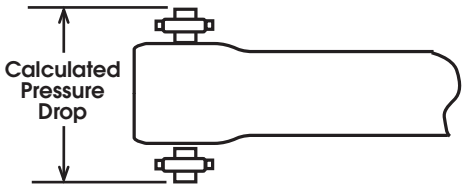

Flow rate V/s Pressure Drop

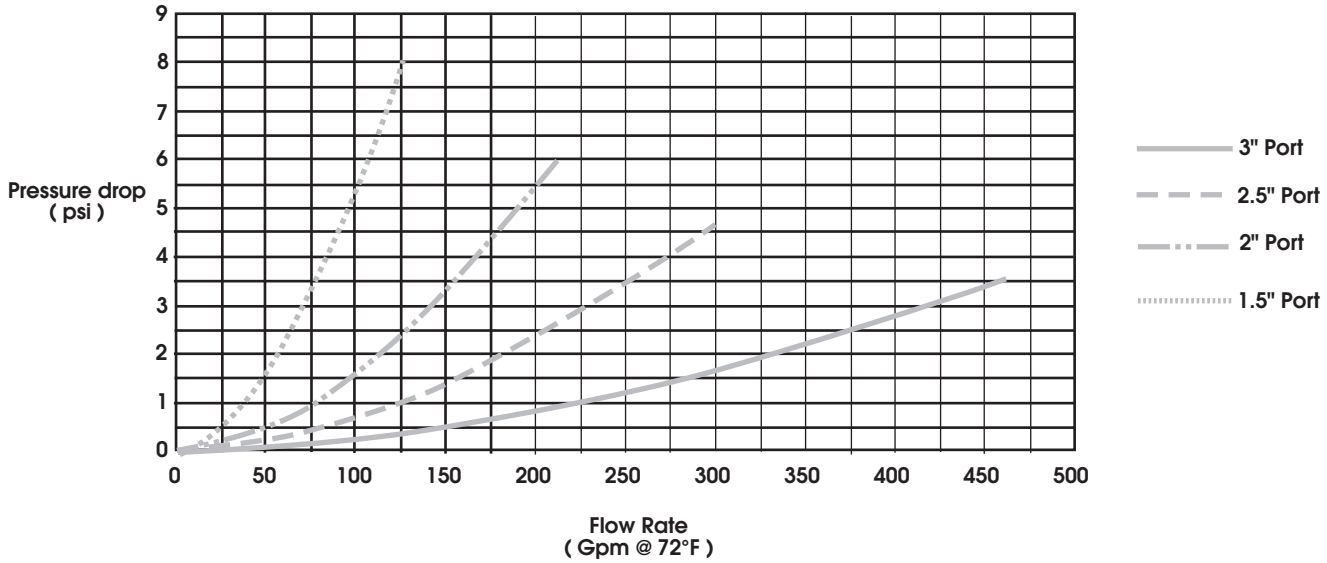

www.hytekintl.com info@hytekintl.com

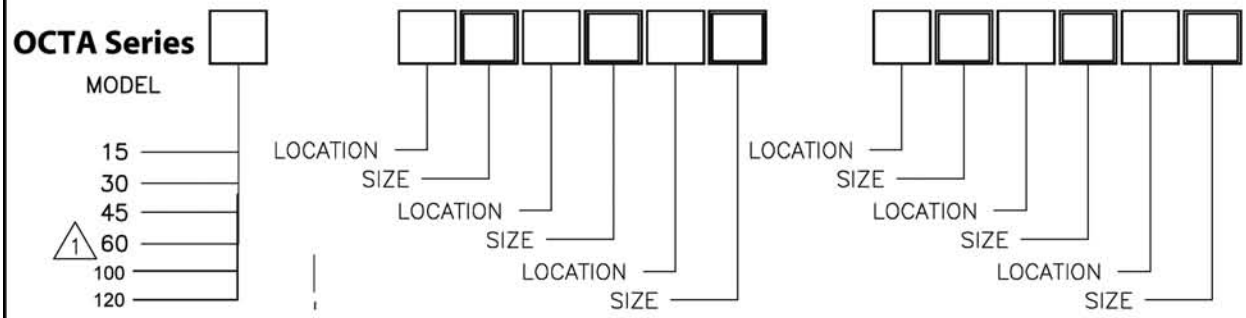

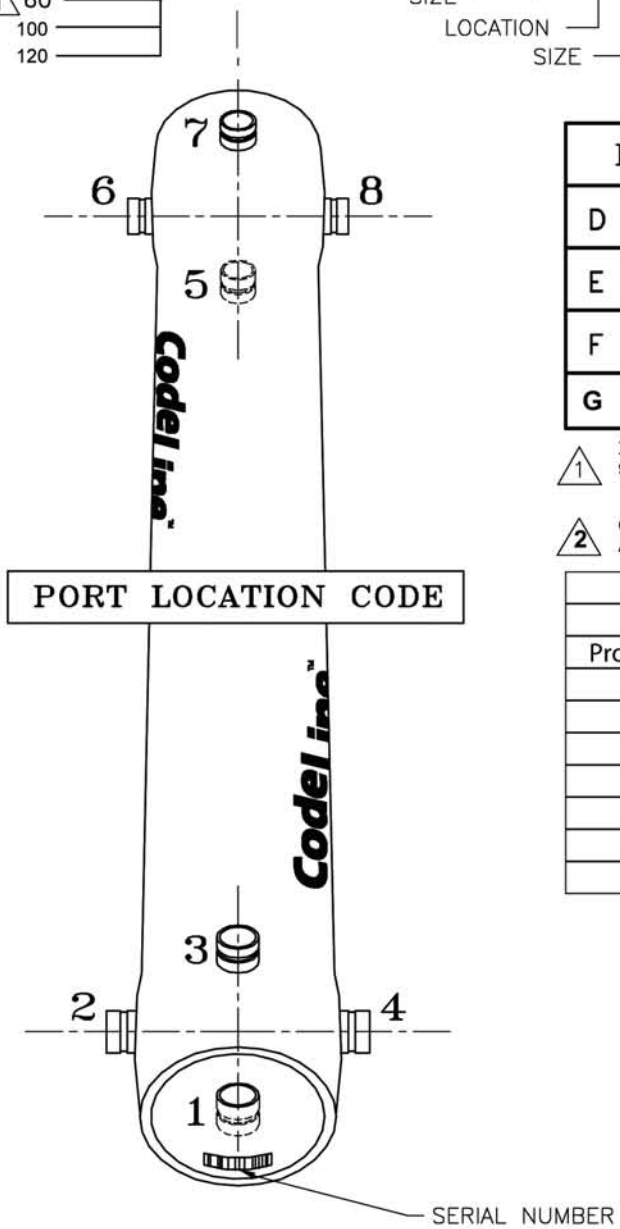

PORT LOCATION CODE

PORT SIZE CODE	
D	1 1/2" GROOVED END
E	2" GROOVED END
F	2 1/2" GROOVED END (1)
G	3" GROOVED END (2)

(1) 2-1/2" & 3.0" PORTS ARE NOT ALLOWED 90 DEGREES FROM ANY PORT

(2) CONSULT YOUR SALES MANAGER ABOUT SPECIFICATIONS ON 3" PORTS.

Material	
316L	
CN3MN	

Date	
Customer	
Project Name / Number	
P.O. Number	
Ship to Address	
ASME	
Membrane	
Heads	
Sanitary ports	
Others	

For Internal Use Only	
S.O. Number	
Ship Date	

CodeLine™
Pentair Water

Approved by CUSTOMER: _____

PLEASE FAX THIS SHEET WITH YOUR ORDER TO: CODELINE CUSTOMER SERVICE DEPT.

www.codeline.com

ORDER SPECIFICATION SHEET
CODELINE OCTA SERIES

SIZE AND LOCATION OF PORTS

www.hytekintl.com info@hytekintl.com

APPLICAZIONI VALVOLE SAMPLE PRO /SAMPLE PRO VALVES APPLICATIONS

VALVOLE SAMPLE PRO CA0001

Introduzione SamplePro™, valvola di prelievo permeato:

- Drastica riduzione dei tempi di campionamento;
- Risoluzione rapida dei problemi;
- Analisi del permeato in pochissimo tempo;
- Campionamento senza il disagio di bagnarsi.

SamplePro™ valves riduce i costi dell' impianto e della sua manutenzione semplificando installazione e campionamento

Qualunque esperto del settore trattamento acque, sa che l' analisi del permeato è il metodo più diffuso ed efficace per prevenire e risolvere eventuali problemi di un impianto. E ancor di più sa che una campionatura rapida ed agevole del permeato, può determinare se la membrana è viziata o meno. Ma i metodi di rilevamento tradizionali, spesso non agevolano questa importante operazione. Le valvole SamplePro – prodotte in esclusiva da CodeLine e rivendute da Hytek come suo distributore esclusivo, sono collegabili direttamente su qualsiasi tappo CodeLine da 8", semplicemente avvitandole.

Benefici

- Riduzione dei tempi d' installazione per valvolame o connessioni, con rapido accesso all' analisi del permeato.
- Riduzione dei tempi di manutenzione e campionamento, con conseguente risparmio sui costi di gestione.
- Miglioramento delle performance dell' impianto con immediata prevenzione di eventuali anomalie.
- Grazie alla loro praticità e semplicità, le valvole SamplePro migliorano la capacità preventiva di manutenzione,
- Il funzionale design delle valvole SamplePro, è stato studiato per intervenire senza l' ausilio di ulteriori valvole.
- Grazie alla loro struttura compatta e robusta, le valvole SamplePro, garantiscono performances e durata nel tempo.

SAMPLE PRO VALVES CA0001

Introducing SamplePro™ Permeate Sampling Valves:

- Dramatically reduce sampling time;
- Isolate problems quickly;
- Sample the permeate stream without down time;
- Stay dry when sampling.

SamplePro™ valves cut costs and maintain system performance by taking the hassle out of permeate sampling.

Water system experts know that permeate sampling is the single most useful method for troubleshooting existing or potential system problems. And, more and more, probing is a requirement for making membrane warranty claims. But traditional methods have always been time consuming and messy. SamplePro valves – exclusively from Codeline and Hytek distribution let you enjoy the benefits of routine sampling by providing a direct connection to the permeate stream of 8" membrane housings. Simply screw SamplePro valves into your current system. Or spec your new CodeLine housings with them.

Benefits:

- Reduced system downtime–Permanent connection allows immediate access to the permeate stream.
- Reduced labor costs– Faster access to the permeate stream saves time and money.
- Improved system performance–Quickly identify and isolate problems before they cripple your system.
- Improved preventive maintenance– With SampleProvalves, sampling is easier. Thus simplifying water-quality profiles.
- Integrated design– SamplePro's compact design streamlines yoursystem. No make-shift valving to get in the way.
- Long lasting– SamplePro valves are designed for years of reliable service.

Le valvole SamplePro, sono garantite per un anno e rappresentano un' applicazione facile e veloce per la campionatura di routine del permeato.

Esempio della facilità di installazione delle valvole SamplePro:

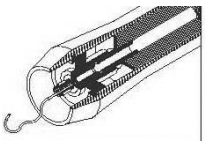

Inserire un tubo da 1/4" dentro alla SamplePro fino a raggiungere il 1°O-R.

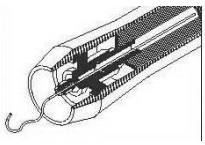

Ruotare la valvola a disco e spingere il tubo fino alla fine del vessel.

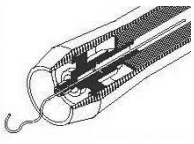

Trascinare il tubo nella posizione di test e ripetere le prove sulla lunghezza del vessel.

SamplePro valves are warranted for a full year, and are a fast, cost-effective way to enjoy thebenefits of routine permeate sampling.

Here's how easy it is with SamplePro valves:

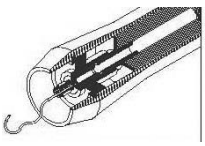

Insert 1/4" tubing into SamplePro valve until captured by first seal.

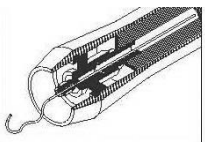

Rotate valve disk and push tubing until it reaches the end of the vessel.

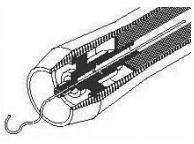

Pull tubing out to next test position and repeat until housing profile is complete.

www.hytekintl.com info@hytekintl.com